ARTISAN COLLECTION

CATHEDRAL CITY, CALIFORNIA

TRACT 29711
SINGLE FAMILY DETACHED

12345678

CLIENT: FORD-DA VALL GROUP, LLC.
68-936 ADELINA RD., CATHEDRAL CITY, CA. 92234
(760) 322-3422 FAX: (760) 322-6333

ARCHITECT: DANIELIAN ASSOCIATES
SIXTY CORPORATE PARK, IRVINE, CA 92606
(949) 474-6030 FAX: (949) 474-1422
WEB SITE: www.danielian.com E-MAIL: production@danielian.com

SHEET INDEX

NO.		SHEET TITLE
T-1		TITLE SHEET
G-1		ABBREVIATIONS & SYMBOLS
G-2		FIRE PROTECTION
G-3		GENERAL NOTES
G-4		GENERAL NOTES
G-5		GENERAL NOTES
G-6 (T-24)		ENERGY REQUIREMENTS / SUMMARIES
G-7 (T-24)		ENERGY REQUIREMENTS / SUMMARIES
A-1.1	PLAN 1A	FOUNDATION PROFILE
A-1.2		FLOOR PLAN
A-1.3		FLOOR PLAN OPTIONS
A-1.4		FIRST FLOOR UTILITY
A-1.5		OPTIONS UTILITY
A-1.6		ROOF PLAN/ SECTIONS
A-1.7	ITALIANTE "A"	EXTERIOR ELEVATIONS
A-1.8		EXTERIOR ELEVATIONS
A-1.9	SPANISH COLONIAL "B"	FOUNDATION/ FLOOR PLAN/ ROOF PLAN
A-1.10		EXTERIOR ELEVATIONS
A-1.11	TUSCAN "C"	FOUNDATION/ FLOOR PLAN/ ROOF PLAN
A-1.12		EXTERIOR ELEVATIONS
A-1.13	CONTEMPORARY "D"	FOUNDATION/ FLOOR PLAN/ ROOF PLAN
A-1.14		EXTERIOR ELEVATIONS
A-2.1	PLAN 1A	FOUNDATION PROFILE
A-2.2		FLOOR PLAN
A-2.3		FLOOR PLAN OPTIONS
A-2.4		FIRST FLOOR UTILITY
A-2.5		OPTIONS UTILITY
A-2.6		ROOF PLAN/ SECTIONS
A-2.7	ITALIANTE "A"	EXTERIOR ELEVATIONS
A-2.8		EXTERIOR ELEVATIONS
A-2.9	SPANISH COLONIAL "B"	FOUNDATION/ FLOOR PLAN/ ROOF PLAN
A-2.10		EXTERIOR ELEVATIONS
A-2.11	TUSCAN "C"	FOUNDATION/ FLOOR PLAN/ ROOF PLAN
A-2.12		EXTERIOR ELEVATIONS
A-2.13	CONTEMPORARY "D"	FOUNDATION/ FLOOR PLAN/ ROOF PLAN
A-2.14		EXTERIOR ELEVATIONS
A-3.1	PLAN 1A	FOUNDATION PROFILE
A-3.2		FLOOR PLAN
A-3.3		FLOOR PLAN OPTIONS
A-3.4		FIRST FLOOR UTILITY
A-3.5		OPTIONS UTILITY
A-3.6		ROOF PLAN/ SECTIONS
A-3.7	ITALIANTE "A"	EXTERIOR ELEVATIONS
A-3.8		EXTERIOR ELEVATIONS
A-3.9	SPANISH COLONIAL "B"	FOUNDATION/ FLOOR PLAN/ ROOF PLAN
A-3.10		EXTERIOR ELEVATIONS
A-3.11	TUSCAN "C"	FOUNDATION/ FLOOR PLAN/ ROOF PLAN
A-3.12		EXTERIOR ELEVATIONS
A-3.13	CONTEMPORARY "D"	FOUNDATION/ FLOOR PLAN/ ROOF PLAN
A-3.14		EXTERIOR ELEVATIONS
A-4.1	PLAN 1A	FOUNDATION PROFILE
A-4.2		FLOOR PLAN
A-4.3		FLOOR PLAN OPTIONS
A-4.4		FIRST FLOOR UTILITY
A-4.5		OPTIONS UTILITY
A-4.6		ROOF PLAN/ SECTIONS
A-4.7	ITALIANTE "A"	EXTERIOR ELEVATIONS
A-4.8		EXTERIOR ELEVATIONS
A-4.9	SPANISH COLONIAL "B"	FOUNDATION/ FLOOR PLAN/ ROOF PLAN
A-4.10		EXTERIOR ELEVATIONS
A-4.11	TUSCAN "C"	FOUNDATION/ FLOOR PLAN/ ROOF PLAN
A-4.12		EXTERIOR ELEVATIONS
A-4.13	CONTEMPORARY "D"	FOUNDATION/ FLOOR PLAN/ ROOF PLAN
A-4.14		EXTERIOR ELEVATIONS
D-1		DETAILS
D-2		DETAILS
D-3		DETAILS
D-4		DETAILS
68		TOTAL ARCHITECTURAL SHEETS
28		TOTAL STRUCTURAL SHEETS

CODE ANALYSIS

OCCUPANCY TYPE	R-3 / U-1
CONSTRUCTION TYPE	V N
UNIFORM BUILDING CODE	1997 EDITION
CALIFORNIA BUILDING CODE	1998 EDITION
UNIFORM MECHANICAL CODE	1997 EDITION
UNIFORM PLUMBING CODE	1997 EDITION
NATIONAL ELECTRICAL CODE	1996 EDITION

CONSULTANTS

STRUCTURAL ENGINEER
ESI-FME
1800 E. 16 TH ST.
SANTA ANA, CA 92701
(714) 835-2800

ENERGY CONSULTANT
MADLIN'S ENTERPRISES
1115 N. ASHER DR.
PALM SPRING, CA. 92262
(760) 322-5004

33.6
3.9
42.3

PC 101/148-151
$ -
DATE 3/14/01

APPROVED FOR CONSTRUCTION
BY THE CITY OF CATHEDRAL CITY
DEPT. OF COMMUNITY DEVELOPMENT
PLANNING [signature] DATE 3-5-01
BUILDING [signature] DATE 5-7-01
ENGINEERING _____ DATE _____

APPROVED FOR PERMIT
DEPARTMENT OF BUILDING & SAFETY
CITY OF CATHEDRAL CITY
68-700 AVENIDA LALO GUERRERO
CATHEDRAL CITY, CA 92234
BY: [signature] DATE: 4-3-01

DANIELIAN ASSOCIATES
ARCHITECTURE & PLANNING
SIXTY CORPORATE PARK
IRVINE, CALIFORNIA 92606
(949) 474-6030
FAX: (949) 474-1422
WWW.DANIELIAN.COM

© DANIELIAN ASSOCIATES EXPRESSLY RESERVES ITS COMMON LAW COPYRIGHT AND OTHER PROPERTY RIGHTS IN THESE PLANS. THESE PLANS ARE NOT TO BE REPRODUCED CHANGED OR COPIED IN ANY FORM OR MANNER WHATSOEVER, NOR ARE THEY TO BE ASSIGNED TO ANY THIRD PARTY WITHOUT FIRST OBTAINING THE EXPRESSED WRITTEN PERMISSION AND CONSENT OF DANIELIAN ASSOCIATES.

REGISTERED PROFESSIONAL ARCHITECT
ARTHUR C. DANIELIAN
No. No. C 4829
STATE OF CALIFORNIA

NO.	DATE	REVISION

PROJECT TITLE:
ARTISAN COLLECTION

PROJECT NO. 00052

SHEET TITLE
TITLE SHEET

ORIGINAL DATE:
PRINT DATE

SHEET NO.
T-1

14 - 149 - 150 - 1

(C) 2001 DANIELIAN ASSOCIATES

00052T1.dwg 03/02/2001 08:58:49

ABBREVIATIONS:

ABV	ABOVE
AD	AREA DRAIN
ADJ	ADJACENT
A/C	AIR CONDENSOR
AL	ALUMINUM
ALT	ALTERNATE
APPROX	APPROXIMATE
APPRVD	APPROVED
ARCH	ARCHITECTURAL
BA	BATH
BALC	BALCONY
BD	BOARD
BED	BEDROOM
BLDG	BUILDING
BLKG	BLOCKING
BLW	BELOW
BM	BEAM
BOT	BOTTOM
BSMNT	BASEMENT
BTWN	BETWEEN
CAB	CABINET
CB	CUTTING BOARD
CL	CENTERLINE
CLG	CEILING
CLR	CLEAR
CMU	CONCRETE MASONRY UNIT
CO	CASED OPENING
COL	COLUMN
CONC	CONCRETE
CONSTR	CONSTRUCTION
CONT	CONTINUOUS
CRIP	CRIPPLE
CSMT	CASEMENT
CT	CERAMIC TILE
CTR	CENTER
D	DRYER
DBL	DOUBLE
DEPT	DEPARTMENT
DF	DOUGLAS FIR
DG	DUAL GLAZED
DH	DOUBLE HUNG
DIA	DIAMETER
DIM	DIMENSION
DN	DOWN
DO	DRYWALL OPENING
DP	DEEP
DR	DOOR
DRWG	DRAWING
DS	DOWNSPOUT
DTL	DETAIL
DW	DISHWASHER
DWR	DRAWER
EA	EACH
E/ENT	ENTRY
EL	ELEVATION (TOPOGRAPHICALLY)
ELEC	ELECTRICAL
ELEV	ELEVATION
EQ	EQUAL
ETC	ET CETERA
EWWM	ELECTRICALLY WELDED WIRE MESH
EXT	EXTERIOR
FAU	FORCED AIR UNIT
FD	FLOOR DRAIN
FF	FINISH FLOOR
FG	FINISH GRADE
FGL	FIXED GLASS
FIN	FINISH
FIX	FIXED
FIXT	FIXTURE
FL	FLUORESCENT
FLASH	FLASHING
FLR	FLOOR
FNDN	FOUNDATION
FOC	FACE OF CONCRETE
FOG	FACE OF GARAGE
FOM	FACE OF MASONRY
FOS	FACE OF STUD
FP	FIREPLACE
FR DR	FRENCH DOOR
FR...	FIRE RATED
FRMG	FRAMING
FS	FINISH SURFACE
FT	FOOT OR FEET
FTG	FOOTING
FURR	FURRING
GA	GAUGE
GB	GRAB BAR
GD	GARBAGE DISPOSAL
GDO	GARAGE DOOR OPENER
GH	GREENHOUSE
GI	GALVANIZED IRON
GL	GLASS
GL BLK	GLASS BLOCK
GR	GRADE
GYP BD	GYPSUM BOARD
H	HALL
HB	HOSE BIBB
HC	HANDICAP (DISABLED)
HDR	HEADER
HORIZ	HORIZONTAL
HR	HOUR
HT	HEIGHT
IN	INCH
INFO	INFORMATION
INSUL	INSULATE/INSULATION
INT	INTERIOR
J	JUNCTION BOX
KDT	KNOCK DOWN TEXTURE
KIT	KITCHEN
LAV	LAVATORY
LBS	POUNDS
LIN	LINEN
LIVING	LIVING ROOM
LT	LIGHT
LTWT CONC	LIGHTWEIGHT CONCRETE
LUM	LUMINOUS
MAS	MASONRY
MAX	MAXIMUM
M BA	MASTER BATH
M BED	MASTER BEDROOM
MC	MEDICINE CABINET
MECH	MECHANICAL
MFR	MANUFACTURER
MIN	MINIMUM
MISC	MISCELLANEOUS
MTD	MOUNTED
NEC	NATIONAL ELECTRIC CODE
NG	NATURAL GRADE
NO	NUMBER
NTS	NOT TO SCALE
OA	OVERALL
OBS	OBSCURE
OC	ON CENTER
OD	OVERFLOW DRAIN
OH	OVERHEAD
OL	OUTLOOKER
OPNG	OPENING
OPP	OPPOSITE
OPT	OPTIONAL
OV	OVEN
P	PANTRY
P/PWDR	POWDER ROOM
PB	PUSH BUTTON
PH	PAPER HOLDER
PL	PLATE
PLYWD	PLYWOOD
PR	PAIR
PTDF	PRESSURE TREATED DOUGLAS FIR
PVC	POLYVINYL CHLORIDE
QT	QUARRY TILE
R	REFRIGERATOR
RAD	RADIUS
RAG	RETURN AIR GRILL
RC	RESILIENT CHANNEL
RD	ROOF DRAIN
REQ	REQUIRED
REV	REVERSE
RM	ROOM
RND	ROUND
RO	ROUGH OPENING
RS	ROLLER SHADE
S/SERV	SERVICE
SAT	SPRAYED ACOUSTICAL TEXTURE
SC	SOLID CORE
SD	SMOKE DETECTOR
SG	SEMI-GLOSS
SH	SINGLE HUNG
SHT	SHEET
SHWR	SHOWER
SIM	SIMILAR
SKYLT	SKYLIGHT
SL	SLIDING WINDOW
SL	SLOPING CEILING
SL DR	SLIDING DOOR
SQ	SQUARE
SPL	SPRING LINE
SQ FT	SQUARE FEET
SQ IN	SQUARE INCH
SS	STAINLESS STEEL
STD	STANDARD
STL	STEEL
STOR	STORAGE
STRUCT	STRUCTURAL
S4S	SURFACE FOUR SIDES
SW	SOLID WOOD
TB	TOWEL BAR
TC	TRASH COMPACTER
TEMP	TEMPERED
THK	THICK
TOC	TOP OF CURB
TOW	TOP OF WALL
TYP	TYPICAL
T&G	TONGUE AND GROOVE
UBC	UNIFORM BUILDING CODE
UMC	UNIFORM MECHANICAL CODE
UNO	UNLESS NOTED OTHERWISE
UPC	UNIFORM PLUMBING CODE
VERT	VERTICAL
VEST	VESTIBULE
VOL	VOLUME
VS	VINYL SHEET
VTO	VENT TO OUTSIDE
VTR	VENT THRU ROOF
W	WASHER
W/	WITH
WD	WOOD
WDW	WINDOW
WH	WATER HEATER
WI	WROUGHT IRON
W/O	WITHOUT
WP	WATER PROOF
WT	WEIGHT

MISC. SYMBOLS:

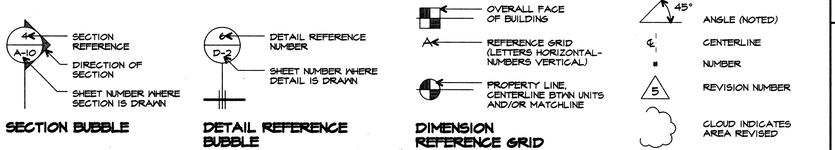

SECTION BUBBLE

DETAIL REFERENCE BUBBLE

DIMENSION REFERENCE GRID

WALL SYMBOLS:

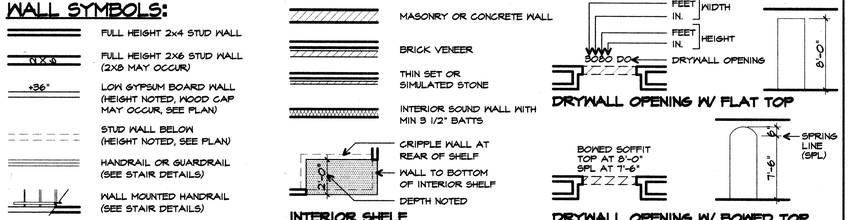

INTERIOR SHELF

DRYWALL OPENING W/ FLAT TOP

DRYWALL OPENING W/ BOWED TOP

INTERIOR ELEVATIONS SYMBOLS:

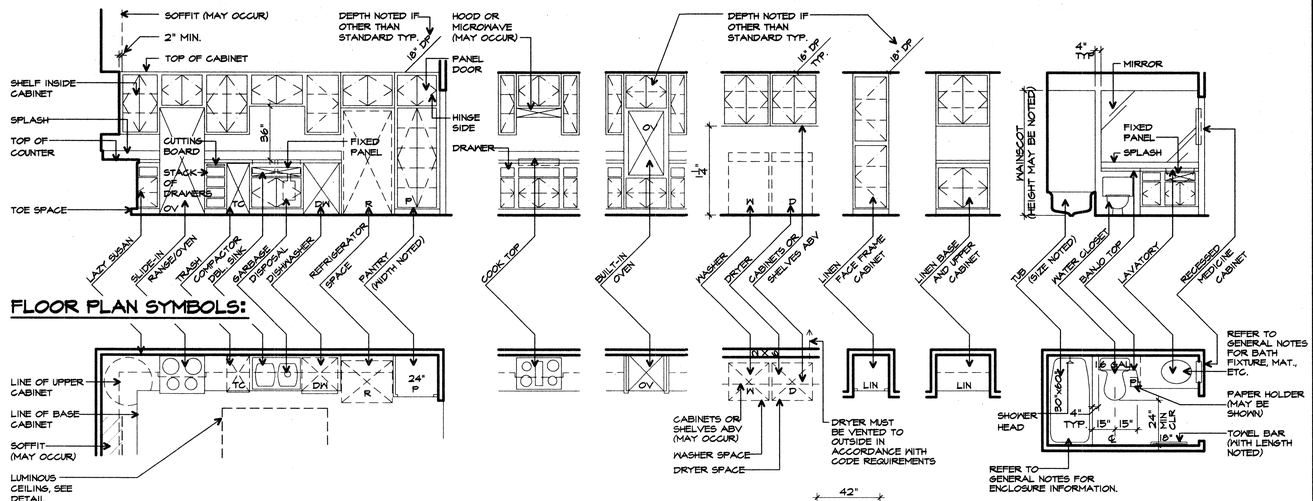

FLOOR PLAN SYMBOLS:

ELECTRICAL/UTILITY SYMBOLS:

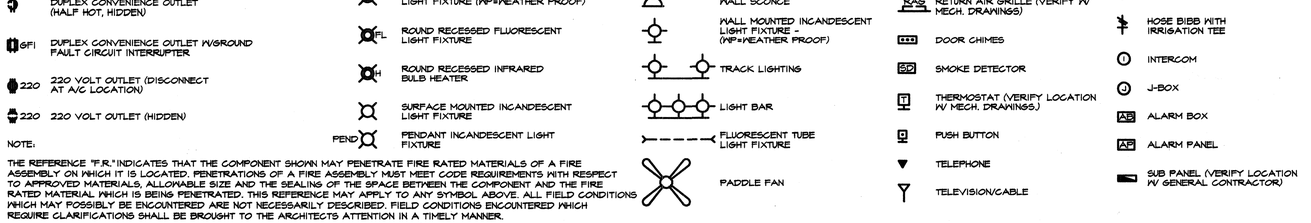

NOTE:

THE REFERENCE "F.R." INDICATES THAT THE COMPONENT SHOWN MAY PENETRATE FIRE RATED MATERIALS OF A FIRE ASSEMBLY ON WHICH IT IS LOCATED. PENETRATIONS OF A FIRE ASSEMBLY MUST MEET CODE REQUIREMENTS WITH RESPECT TO APPROVED MATERIALS, ALLOWABLE SIZE AND THE SEALING OF THE SPACE BETWEEN THE COMPONENT AND THE FIRE RATED MATERIAL WHICH IS BEING PENETRATED. THIS REFERENCE MAY APPLY TO ANY SYMBOL ABOVE. ALL FIELD CONDITIONS WHICH MAY POSSIBLY BE ENCOUNTERED ARE NOT NECESSARILY DESCRIBED. FIELD CONDITIONS ENCOUNTERED WHICH REQUIRE CLARIFICATIONS SHALL BE BROUGHT TO THE ARCHITECTS ATTENTION IN A TIMELY MANNER.

DANIELIAN ASSOCIATES
ARCHITECTURE & PLANNING
SIXTY CORPORATE PARK
IRVINE, CALIFORNIA 92606
(949) 474-6050
FAX: (949) 474-1422
WWW.DANIELIAN.COM

© DANIELIAN ASSOCIATES EXPRESSLY RESERVES ITS COMMON LAW COPYRIGHT AND OTHER PROPERTY RIGHTS IN THESE PLANS. THESE PLANS ARE NOT TO BE REPRODUCED CHANGED OR COPIED IN ANY FORM OR MANNER WHATSOEVER, NOR ARE THEY TO BE ASSIGNED TO ANY THIRD PARTY WITHOUT FIRST OBTAINING THE EXPRESSED WRITTEN PERMISSION AND CONSENT OF DANIELIAN ASSOCIATES.

REGISTERED PROFESSIONAL ARCHITECT — ARTHUR C. DANIELIAN — Reg. No. C 4829 — CALIFORNIA

NO.	DATE	REVISION

PROJECT TITLE
ARTISAN COLLECTION

PROJECT NO. 00052

SHEET TITLE
ABBREVIATIONS AND SYMBOLS

ORIGINAL DATE:
©
©
©
©

PRINT DATE

SHEET NO. G-1

\\MTEC\00052\Production\00052G1.dwg Mon Feb 19 10:58:14 2001

FIRE PROTECTION:
R-3 (DWELLING) TO U-1 (PRIVATE GARAGE) OCCUPANCY SEPARATION

NOTES:

OCCUPANCY SEPARATIONS SHALL BE VERTICAL OR HORIZONTAL OR BOTH OR, WHEN NECESSARY, OF SUCH OTHER FORM AS MAY BE REQUIRED TO AFFORD A COMPLETE SEPARATION BETWEEN THE VARIOUS OCCUPANCY DIVISIONS IN THE BUILDING. WHERE THE OCCUPANCY SEPARATION IS HORIZONTAL, STRUCTURAL MEMBERS SUPPORTING THE SEPARATION SHALL BE PROTECTED BY EQUIVALENT FIRE-RESISTIVE CONSTRUCTION. (UBC, SEC 302.2)

THE INFORMATION SHOWN HERE IS INTENDED TO ILLUSTRATE THE "GENERAL" FIRE PROTECTION REQUIREMENTS FOR R-3 TO U-1 OCCUPANCY SEPARATION AND THE MINIMUM APPLICABLE U.B.C. REQUIREMENTS. REFER TO U.B.C. CHAPTERS 3, 5, 6, 7, 8, 9, 23 AND 31 FOR DETAILED REQUIREMENTS.

ALL FIELD CONDITIONS WHICH MAY POSSIBLY BE ENCOUNTERED ARE NOT NECESSARILY DESCRIBED. FIELD CONDITIONS ENCOUNTERED WHICH REQUIRE CLARIFICATION SHALL BE BROUGHT TO THE ARCHITECTS ATTENTION IN A TIMELY MANNER.

THE ARCHITECT RECOMMENDS THAT ALL TRADES PERFORMING WORK AT FIRE PROTECTION AREAS BE FULLY KNOWLEDGABLE OF THE CODE REQUIREMENTS FOR MATERIALS AND INSTALLATION. FURTHER, IT IS RECOMMENDED THAT THE GENERAL CONTRACTOR FIELD WALK THE ENTIRE LENGTH AND EXTENT OF THE FIRE PROTECTED AREAS WITH THE BUILDING OFFICIAL DURING THE MODEL UNIT CONSTRUCTION TO INSURE THAT ALL MATERIALS, INSTALLATION, PENETRATIONS, CONNECTIONS, ETC. ARE COMPLETE AND IN ACCORDANCE WITH ALL CODE REQUIREMENTS. ALL "GENERAL" REQUIREMENTS SHOWN SHALL BE VERIFIED WITH LOCAL ORDINANCES AND REQUIREMENTS, THE MORE STRINGENT SHALL PREVAIL.

FOOTNOTES APPLICABLE TO DETAILS:

1. REFER TO SPECIFIC FIRE ASSEMBLIES FROM U.B.C. TABLE 7 FOR ALL ADDITIONAL FOOTNOTES, SPECIAL REQUIREMENTS AND PROPRIETARY MATERIALS.
2. REFER TO STRUCTURAL DRAWINGS FOR ALL STRUCTURALLY REQUIRED SHEATHING THICKNESSES, MEMBER SIZING AND SPACING BEYOND THE FIRE PROTECTION MINIMUMS NOTED HERE. CONFLICTING INFORMATION SHALL BE BROUGHT TO THE ARCHITECTS ATTENTION IN A TIMELY MANNER.

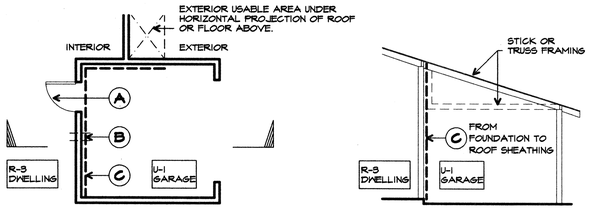

I. 1 STORY — PLAN VIEW — SECTION VIEW

FULL WALL PROTECTION

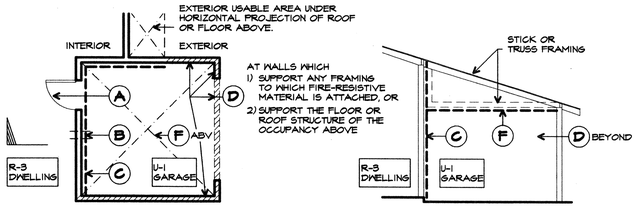

II. 1 STORY — PLAN VIEW — SECTION VIEW

PARTIAL WALL AND FULL CEILING PROTECTION

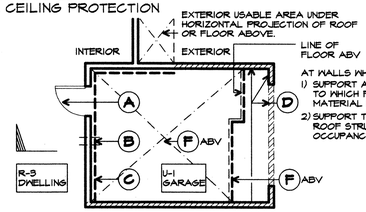

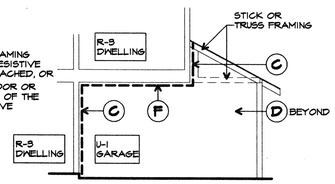

III. 2 STORY — PLAN VIEW — SECTION VIEW

FULL WALL AND PARTIAL CEILING PROTECTION

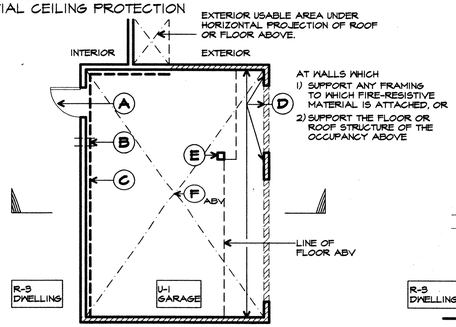

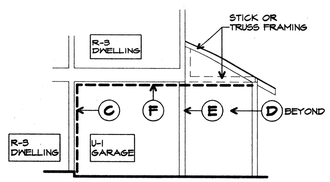

IV. 2 STORY — PLAN VIEW — SECTION VIEW

PARTIAL WALL AND FULL CEILING PROTECTION

* SELF-CLOSING, TIGHT FITTING, SOLID WOOD DOOR, 1 3/8 INCHES IN THICKNESS, OR SELF-CLOSING TIGHT FITTING DOOR HAVING A FIRE-PROTECTION RATING OF NOT LESS THAN 20 MINUTES.

A DOOR — UBC, SEC 302.4

* VERIFY MINIMUM DOOR THICKNESS WITH LOCAL SECURITY REQUIREMENTS — 1 HR CONSTRUCTION

FIRE DAMPERS NEED NOT BE INSTALLED IN AIR DUCTS PASSING THROUGH THE WALL, FLOOR OR CEILING SEPARATING R-3 FROM U-1 OCCUPANCIES, PROVIDED SUCH DUCTS WITHIN THE U-1 OCCUPANCY ARE CONSTRUCTED OF NO. 26 GALVANIZED SHEET GAUGE STEEL (0.019 IN MIN) AND HAVE NO OPENINGS INTO THE U-1 OCCUPANCY

B MECHANICAL PENETRATION — UBC, SEC 302.4

1 HR CONSTRUCTION

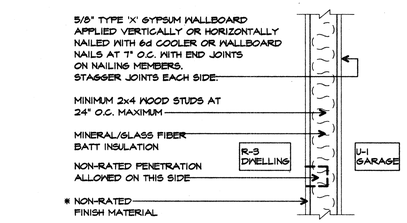

C1 INTERIOR WALL — UBC, TABLE 7-B, 17-I.3[1,2]

* THIS ASSEMBLY HAS BEEN MODIFIED AS ALLOWED BY SEC. 302.4, LIMITING THE REQUIRED FIRE-PROTECTION MATERIALS TO BE INSTALLED ON THE GARAGE SIDE ONLY.
1 HR CONSTRUCTION

C WALLS BETWEEN GARAGE AND DWELLING

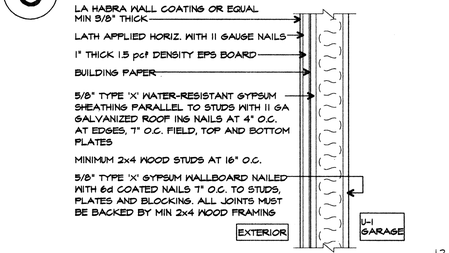

EXTERIOR WALL — LA HABRA - EXTERIOR WALL SYSTEM[1,2] — ICBO REPORT NO. 4226[2]

1 HR FIRE-RESISTIVE CONSTRUCTION

D WALLS WHICH SUPPORT OCCUPANCY SEPARATION
WALLS WHICH SUPPORT THE STRUCTURE OF OCCUPANCY ABOVE

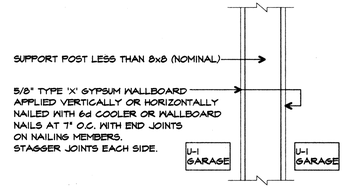

E1 ISOLATED POST — UBC, TABLE 7-B, 17-I.3[1,2]

1 HR FIRE-RESISTIVE CONSTRUCTION

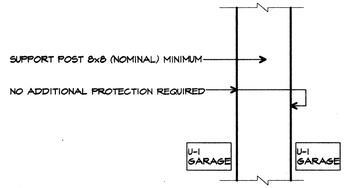

E2 ISOLATED POST — UBC, SEC 603.6.2[1,2]

HEAVY TIMBER
1 HR FIRE-RESISTIVE CONSTRUCTION

E ISOLATED POST WHICH SUPPORTS OCCUPANCY SEPARATION
ISOLATED POST WHICH SUPPORTS THE STRUCTURE OF OCCUPANCY ABOVE

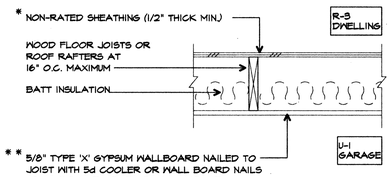

** WALLBOARD THICKNESS HAS BEEN INCREASED FOR THIS ASSEMBLY TO COMPLY WITH MINIMUM 1 HOUR RATING OF ASSEMBLED COMPONENTS PER SEC. 7-7, PART V.

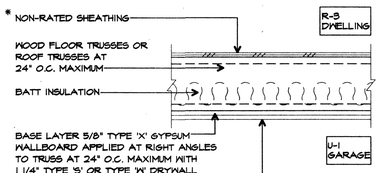

F1 FLOOR/CEILING - ROOF/CEILING — UBC, TABLE 7-C 15-I.4[1,2]

* THIS ASSEMBLY HAS BEEN MODIFIED AS ALLOWED BY SEC. 302.4, LIMITING THE REQUIRED FIRE-PROTECTION MATERIALS TO BE INSTALLED ON THE GARAGE SIDE ONLY.
1 HR CONSTRUCTION

F2 FLOOR/CEILING - ROOF/CEILING — UBC, TABLE 7-C 21-I.1[1,2]

* THIS ASSEMBLY HAS BEEN MODIFIED AS ALLOWED BY SEC. 302.4, LIMITING THE REQUIRED FIRE-PROTECTION MATERIALS TO BE INSTALLED ON THE GARAGE SIDE ONLY.
1 HR CONSTRUCTION

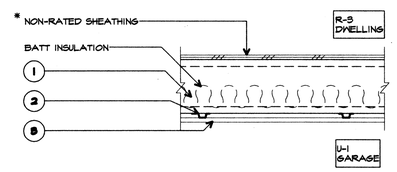

F3 FLOOR/CEILING

* THIS ASSEMBLY HAS BEEN MODIFIED AS ALLOWED BY SEC. 302.4, LIMITING THE REQUIRED FIRE-PROTECTION MATERIALS TO BE INSTALLED ON THE GARAGE SIDE ONLY.
1 HR CONSTRUCTION

F GARAGE SURFACE BETWEEN GARAGE AND DWELLING

OPTION A — GYPSUM ASSOCIATION FIRE RESISTANCE DESIGN MANUAL FC 5513[1,2]

1. PARALLEL CHORD WOOD TRUSSES AT 24" O.C. MAXIMUM
2. CONTINUOUS FURRING CHANNELS AT 24" O.C. MAXIMUM. PERPENDICULAR TO TRUSSES SECURED WITH DOUBLE STRAND OF 18 GAUGE GALVINIZED STEEL WIRE AT 48" O.C.
3. 5/8" PROPRIETARY TYPE 'X' GYPSUM WALLBOARD (BY THE CELOTEX CORPORATION OR THE GEORGIA-PACIFIC CORPORATION) OR BASE VENEER APPLIED AT RIGHT ANGLES TO FURRING CHANNELS WITH 1" TYPE S DRYWALL SCREWS AT 12" O.C. AND 1 1/2" FROM EDGES AND END JOINTS LOCATED MIDWAY BETWEEN FURRING CHANNELS

OPTION B — C.A.B.O. REPORT NO. NER-200[1,2] — TRUSS JOIST MACMILLAN, A LIMITED PARTNERSHIP

1. TJI JOIST (TJI/5565,75 OR 550)
2. USG RC-1 CHANNEL AT 16" O.C.
3. 5/8" USG TYPE 'C' FIRECODE GYPSUM WALLBOARD

NOTE:
THE USE OF THIS PRODUCT SPECIFIC ASSEMBLY REQUIRES THAT THE GENERAL CONTRACTOR:
A. INSTALLS THE ASSEMBLY IN ITS ENTIRETY
B. PROVIDES THE ARCHITECT, PRIOR TO INSTALLATION, EVIDENCE OF A CURRENT FIRE TEST REPORT AS ACCEPTABLE TO THE BUILDING OFFICIAL

DANIELIAN ASSOCIATES
ARCHITECTURE & PLANNING
SIXTY CORPORATE PARK
IRVINE, CALIFORNIA 92606
(949) 474-6030
FAX: (949) 474-1422
WWW.DANIELIAN.COM

© DANIELIAN ASSOCIATES EXPRESSLY RESERVES ITS COMMON LAW COPYRIGHT AND OTHER PROPERTY RIGHTS IN THESE PLANS. THESE PLANS ARE NOT TO BE REPRODUCED CHANGED OR COPIED IN ANY FORM OR MANNER WHATSOEVER, NOR ARE THEY TO BE ASSIGNED TO ANY THIRD PARTY WITHOUT FIRST OBTAINING THE EXPRESSED WRITTEN PERMISSION AND CONSENT OF DANIELIAN ASSOCIATES.

REGISTERED PROFESSIONAL ARCHITECT — ARTHUR C. DANIELIAN — No. C 4829 — STATE OF CALIFORNIA

NO.	DATE	REVISION

PROJECT TITLE
ARTISAN COLLECTION

PROJECT NO. 00052

SHEET TITLE
FIRE PROTECTION R-3 / U-1 OCCUPANCY SEPARATION

ORIGINAL DATE:
©
©
©
©

PRINT DATE

SHEET NO. G-2

D:\ATEC\00052\Production\00052G2.dwg Mon Feb 19 10:58:25 2001

GENERAL NOTES

1997
UBC

SECTIONS

1A	-	GENERAL REQUIREMENTS
2A	-	EARTHWORK
3A	-	CONCRETE
4A	-	MASONRY
5A	-	METAL
5B	-	STRUCTURAL STEEL
6A	-	ROUGH CARPENTRY
6B	-	FINISH CARPENTRY
6C	-	CABINETS
6D	-	MOLDED MILLWORK
7A	-	ROOFING AND WATERPROOFING
7B	-	SHEET METAL
7C	-	INSULATION
7D	-	ELASTOMERIC MEMBRANE
7E	-	SKYLIGHTS
8A	-	FINISH HARDWARE
8B	-	DOORS
8C	-	WOOD WINDOWS
8C	-	ALUMINUM/VINYL DOORS AND WINDOWS
8D	-	GLASS AND GLAZING
8E	-	WEATHERSTRIPPING AND THRESHOLDS
8F	-	GARAGE DOOR HARDWARE
9A	-	STUCCO
9B	-	GYPSUM WALLBOARD AND CEILING BOARD
9C	-	RESILIENT FLOORING
9D	-	TILE
9E	-	PAINTING AND FINISHING
10A	-	BUILDER SPECIALTIES/FINISH SCHEDULE
15A	-	PLUMBING
15B	-	SPRINKLERS
15C	-	HEATING AND AIR CONDITIONING
16A	-	ELECTRICAL

Ford Da Vall Group shall be referred to as Owner/Client throughout these General Notes.

SECTION 1A -- GENERAL REQUIREMENTS

1. **Owner/Client Responsibilities:** Reference is made throughout these General Notes to responsibilities and standards of care to be fulfilled by those providing services in the development and construction of this project. Owner/Client shall be responsible for adherence to those requirements by the Owner, Builder, Developer, General Contractor, Subcontractors and other professional Consultants not retained by the Architect.

2. **Builder's Set:** The scope of this set of plans is to provide a "builder's set" of construction documents and general notes hereinafter referred to as "plans". This set of plans is sufficient to obtain a building permit; however, all materials and methods of construction necessary to complete the project are not necessarily described. The plans delineate and describe only locations, dimensions, types of materials and general methods of assembling or fastening. They are not intended to specify particular products or other methods of any specific material, product or method. The implementation of the plans requires a Owner/Client/Contractor thoroughly knowledgeable with the applicable building codes and methods of construction specific to this product type and type of construction.

3. **Building Maintenance:** The exposed materials used in the construction of this project will deteriorate as the completed project ages unless properly and routinely maintained. Owner/Client shall provide or cause the development of a comprehensive maintenance manual which shall be given to each homeowner which specifically describes required periodic inspection, maintenance, repair and replacement of building and surrounding components. Special attention shall be given to landscaping, landscape irrigation, site drainage, building water run-off control, major structural components, fire assemblies, sound assemblies, waterproof walking surfaces and exposed wood and metal. Adequate funds shall be allocated by those responsible for such maintenance to insure required maintenance is performed in a timely manner.

4. **Codes:** All work shall comply with the most stringent requirements of all current applicable city, county state and federal laws, rules, codes, ordinances and regulations. If the General Contractor or any Subcontractor performs any work in conflict with the above mentioned laws, rules, codes, ordinances and regulations, then the contractor in violation shall bear all costs of repair arising out of the non-conforming work. A partial list of the applicable codes are listed on Sheet T-1.

5. **Permits:** The general building permit and plan check shall be secured and paid for by Owner/Client. All other permits shall be secured and paid for by the Subcontractor directly responsible.

6. **Insurance:** The General Contractor and every Subcontractor performing work or providing services and/or materials for the work are required to purchase and maintain in force "All Risk" Builders Insurance prior to commencement of the work and/or furnishing labor, services and materials. Each "All Risk" policy shall be in an amount sufficient to cover the replacement value of the work being performed and/or the labor, services and materials being supplied by the General Contractor, Subcontractors, Architect, and all professional Consultants.

7. **Insurance:** Owner/Client shall cause the General Contractor and every Subcontractor performing work or providing services and/or materials for the work to purchase and maintain General Liability Insurance, on an occurrence basis, in an amount not less than one million dollars and shall name Owner/Client and Architect as additional insureds to said policy.

8. **Named Products:** The Architect makes no guarantee for products identified by trade name or manufacturer.

9. **Scope:** The General Contractor and Subcontractors shall furnish all labor, equipment, and material indicated on the plans and reasonably inferred or required by the applicable codes.

10. **Substitution:** No substitutions shall be made without written authorization by Owner/Client. Any substitution shall be made known to Owner/Client and Architect in advance to avoid any delay in the project schedule. The General Contractor and any Subcontractor shall not make the structural substitutions or changes without prior written authorization from the structural engineer and written notification to the Architect.

11. **Changes:** Any addition, deletion, or change in the scope of the work described by the plans shall be by written change order only. Any approval from the building official for a change in the work shall be the responsibility of the General Contractor.

12. **Intention:** The General Contractor shall insure that all labor, materials, equipment and transportation shall be included in the work for complete execution of the project. The Architect shall not be responsible for the means and methods of construction.

13. **Review of Drawings:** The General Contractor and all Subcontractors shall review the full content of the plans for discrepancies and omissions prior to commencement of work. Any discrepancies or omissions in the plans shall be communicated to the Architect within a reasonable time of discovery. The General Contractor and all Subcontractors shall be responsible for any work not in conformance with the plans or in conflict with any code.

14. **Use of the Drawings:** Detailed large scale drawings on "D" sheets and notes on "G" sheets take precedence over general small scale drawings and notes on "A" sheets. Dimensions take precedence over scaled measurements. Details and sections on the drawings are shown at specific locations and are intended to show general requirements throughout. Details noted "typical" imply all like conditions treated similarly, unless noted otherwise. The architectural details shown are intended to further illustrate the visual design concept and the minimum recommended weather protection for this project. Building code requirements, structural considerations, trade association manuals and publications and product manufacturer's written instructions shall also be considered in order to complete the construction of the details, and in some cases may supersede the details. Each contractor on the job shall bring all necessary changes to the attention of the Architect prior to construction. All possible field conditions which may be encountered are not necessarily described. Field conditions encountered which require clarification shall be brought to the attention of the Architect in a timely manner.

15. **Shop Drawings:** All shop drawings required by the plans shall be submitted to the Architect ten (10) working days prior to fabrication for review of compliance with the design concept.

16. **Approved Drawings:** The General Contractor shall be responsible for coordinating the work between the different Subcontractors and requiring all Subcontractors to use the most current building department approved set of plans.

17. **Model Building/Unit Construction:** It is intended that an initial building/unit (i.e. model) be constructed for each plan, plan alternate, elevation or elevation alternate sufficiently in advance of the remaining production buildings/units for the purpose of resolving discrepancies, correcting omissions and providing clarification in the construction documents during the construction of the (model) buildings/units.

SECTION 1A -- GENERAL REQUIREMENTS (CONT.)

18. **Structural Observation:** Owner/Client shall be responsible to fulfill the requirements of Section 1702 of the U.B.C. to employ his designated Engineer to make site visits to observe general compliance with the approved structural plans and change orders. The Engineer shall submit a statement in writing to the Owner's representative, special inspector, contractor and Building Official stating that the site visits have been made and identifying any reported deficiencies which, to the best of the engineer's knowledge, have not been resolved.

19. **Related Documents:**
   A. General requirements of this document shall be the American Institute or Architect's Standard Document No. 201 including all supplementary general conditions.
   B. Soils Report: Refer to the current preliminary Soils Report as provided by Owner/Client for all soil recommendations. Refer to the final soils report provided by Owner/Client for final recommendations.
   C. Energy Compliance: Refer to the current energy compliance report as provided by Owner/Client for construction components necessary for compliance.
   D. Structural Engineering: Refer to the current structural calculations for back-up structural information. See Item 1A, 10 and 11.
   E. Acoustical Report: Refer to the current acoustical report for additional requirements, if any.
   F. The General Contractor shall obtain full listing or copies of all related documents not listed from Owner/Client, necessary to properly execute all work.

20. **Topographic Grades, Lines and Levels:** The General Contractor shall compare the existing site grades to the grades shown on the plans. Any discrepancy in elevations referenced on the plans shall be communicated to the Architect for review before proceeding with the work. The General Contractor shall be responsible for the accuracy of all building lines and levels.

21. **Cutting and Patching:** All Subcontractors shall do their own cutting, fitting, patching, etc., to make the several parts come together properly and fit it to receive or be received by work of other trades.

22. **Clean-up:** All trades shall, at all times, keep the premises free from accumulation of waste materials or rubbish caused by their work. Subcontractors shall remove all rubbish, tools, scaffolding, surplus materials and leave the job in a broom-clean condition. All fixtures, equipment, glazing, floors, etc., shall be left clean and ready for occupancy upon completion of the project.

23. **Trade Manuals and Publications:** The plans refer to various professional Trade Association manuals and publications. The General Contractor and all Subcontractors shall be familiar with and refer to the trade publications in the performance of their portion of the work. Trade manuals are hereby referenced for each section of these General Notes.

24. **Storage of Materials:** The General Contractor and Subcontractors shall be responsible for storing the materials on the site according to material suppliers' or manufacturers' instructions. The materials shall be kept secure and protected from moisture, pests, and vandals. Any loss arising out of materials stored at the site shall be the responsibility of the General Contractor or Subcontractor who stored the damaged or lost materials.

25. **Infiltration Control:** All openings in the building envelope must be caulked, gasketed or weather stripped in accordance with mandatory energy requirements.

SECTION 2A -- EARTHWORK

1. **Scope:**
   A. The General Contractor shall take all necessary measures to fully protect adjacent properties.
   B. The work consists of furnishing all labor, equipment, materials and performing all operations necessary for all earthwork.
   C. All site work, grading, excavating, cutting, filling compaction, etc., shall conform to recommendations of the Soils Report noted in Section 1A. Any deviation from those recommendations is the sole responsibility of the General Contractor.
2. **Excavations:**
   A. Excavations for footings shall be made to the width, length, and depth required. Finish with level bottoms.
   B. Excavations shall be kept free of standing water.
   C. Where excavations are made to depth greater than indicated, such additional depth shall be filled with concrete as specified for footings.
3. **Fill and Backfill:**
   A. Fill materials shall be free from debris, vegetable matter and other foreign substances.
   B. Backfilling for trenches shall be compacted to density recommended in Soils Report.
   C. Backfill for pipe trenches shall be compacted on both sides of pipe in six-inch layers or as recommended in Soils Report.
   D. All trades shall backfill their own trenches, unless otherwise directed.
   E. Trenches for water and sewer service from sidewalk to house shall be water settled and compacted after services are installed as specified in Soils Report.
   F. Provide termite treatment of soil prior to pouring of concrete.
4. **General Grading and Drainage:**
   A. See Civil Engineering drawings and notes.
   B. Finish grade surrounding units shall be graded to direct surface run off away from foundations for a minimum distance of 5 feet, sloped at (2%), towards a water disposal area or subdrain system approved by the Civil and Soils Engineers. Verify requirements with final Soils Report, the more stringent shall prevail.
   C. See Civil Engineering drawings for design of a complete drainage system, independent from other drainage systems, to remove nuisance water from behind all retaining walls, including but not limited to: french drain layout, slope, clean-outs, and outlet information.

SECTION 3A - CONCRETE: REFER TO STRUCTURAL DRAWINGS BY OTHERS FOR CONCRETE SPECIFICATIONS NOTES, DETAILS AND EMBEDMENTS TO BE USED ON THIS PROJECT

FOR EXTERIOR FLAT WORK AND NON-STRUCTURAL CONCRETE

1. **Scope:**
   A. Furnish, install and finish concrete work complete, including final grading and surface preparation under slabs, form work, reinforcing, expansion joints, moisture barriers, etc.
   B. Refer to final Soils Report provided by Owner/Client for all recommendations recommendations pertaining to site preparation, and corrosive properties of the soil. All contained in Soils Report to take precedence over details and information indicated.
   C. Verify extent and location of all flat work with Landscape drawings.
   D. The General Contractor shall coordinate and verify all concrete dimensions, slopes, drains and recesses with all trades prior to the placement of concrete.
   E. Refer to Landscape and Civil Engineering drawings for the continuation of retaining walls (yard walls) between units beyond what is indicated. All grade conditions surrounding units are to be verified with Civil Engineering drawings, Landscape drawings and field conditions. Discrepancies in elevations given are to be brought to the attention of the Architect prior to construction.
   F. Footings located in proximity of the top of slope must extend in depth such that the outer top edge of the footings is horizontally a distance from the face of the slope, as specified in Soils Report, civil drawings and U.B.C. requirements, the more stringent shall prevail.
2. **Standards:** All work and materials shall meet the latest edition performance standards of the "American Concrete Institute" - ACI.
3. **Workmanship:**
   A. Concrete shall be worked in all forms, into all corners and around reinforcement.
   B. Concrete flat work shall slope 1/4" per foot minimum to drain or as indicated on the drawings allowing no puddling to occur. Verify all slope conditions with all applicable disabled accessible route requirements.
   C. Verify locations of raised and depressed slabs to receive other materials prior to slab placement.
   D. Provide termite treatment of soil prior to pouring of concrete.
4. **Finishing:**
   A. As detailed by Landscape Architect.
5. **Materials:**
   A. Cement: ASTM C150, Type I (verify with Soils Report). See Section 1904.3.1 and Table 19-B-3 of the U.B.C. for soils containing sulphate concentration exceeding 0.1%. Verify with Soils Engineer prior to field implementation.
   B. Aggregates: ASTM C33.
   C. Water: Clean, fresh, suitable for domestic purposes.
   D. Reinforcing steel: ASTM A615-40.
   E. Tie wire: Reinforcing steel shall be securely tied in place with #16 double annealed steel wire. Bars shall be supported on well-cured concrete blocks or Landscape Architect approved metal chairs.
   F. Exterior Flatwork: Driveways, walks, patios, etc., to have expansion joints, reinforcing, etc., as specified in the Soils Report and as detailed by the Landscape Architect.
6. **Design Mix:**
   A. Compressive strength: 2,500 psi - minimum at 28 days.
   B. Ready-mix concrete: ASTM C94.

SECTION 4A -- MASONRY

1. **Scope:**
   A. Furnish and install all masonry work complete, including masonry veneer, glass masonry, grout, mortar, expansion joints and masonry reinforcing, etc.
   B. Refer to Landscape and Civil Engineering drawings for the continuation of retaining walls (yard walls) between units beyond what is indicated. All grade conditions surrounding units are to be verified with Civil Engineering drawings, Landscape drawings and field conditions. Discrepancies in elevations given are to be brought to the attention of the Architect prior to construction. Top of footings given are approximate.
   C. Provide suitable surface, cant strips, etc., at retaining walls where waterproof membranes are to be applied as recommended by waterproof membrane manufacturer.
   D. All reinforced continuous footings and walls shall be adequately tied at corners and intersections per standard masonry construction practices or per Structural Engineer's requirements as requested by the General Contractor.
   E. See Civil Engineering drawings for design of a complete drainage system, independent from other drainage systems, to remove nuisance water from behind all retaining walls, including: french drain layout, slope, clean-outs, and outlet information.
   F. Provide elastomeric membrane waterproofing at retaining wall conditions per details and per Section 7D.
2. **Standards:** All work and materials shall meet the latest edition performance standards of the "Masonry Institute of America" - MIA.
3. **Workmanship:**
   A. Masonry shall comply with U.B.C. Chapter 21.
   B. Masonry veneer shall comply with U.B.C. Chapter 14.
   C. Work shall be plumb, level and true to line with consistent joints.
   D. Reinforcing shall be accurately placed, and held in position top and bottom.
   E. All manufactured stone, thin set pavers, adhered veneers, etc., shall be installed over a suitable, structurally sound, weatherproof substrate per the manufacturer's instructions.
   F. Exposed exterior mortar joints shall be dimensionally consistent and weather struck.
   G. Provide weeps as required by highest quality of masonry construction.
4. **Materials:**
   A. Masonry units: Manufactured stone/Glass block/Thin set "adhered veneer" paver/Full brick/Stone veneer as selected by the Architect. Structural - ASTM, C-90, Grade N.
   B. Water: Clean, fresh; suitable for domestic purposes.
   C. Portland cement: ASTM C150, Type I.
   D. Sand: ASTM C144.
   E. Lime: Hydrated - ASTM C207, Type S.
   F. Cement mortar: One part cement; 3 parts maximum sand, 1/4 part minimum to 1/2 part maximum hydrated lime. All parts by volume. Type S or N mortar for glass block or as required by code and manufacturer's requirements.
   G. Grout: One part cement to 3 parts sand. Add water to produce consistency for pouring without separation.
   H. Reinforcing steel: ASTM A615-40. Glass block joint reinforcement shall be hot-dipped galvanized.
   I. Tie Wire: ASTM A82, 16 gauge; black annealed.
   J. Veneer ties: Corrugated galvanized steel, Steel-Tex or Owner/Client selected substitute.
      (1) In brick masonry with grout spaces 2 inches or larger, 2 parts pea gravel may be added.
   K. Waterproofing: Provide elastomeric membrane waterproofing per Section 7D at retaining wall conditions.

SECTION 5A -- METAL

1. **Scope:** Furnish all metal shapes, supports, angles, bars, plates, bolts and attachments as they relate to grills, gates, railings, etc., that are not a part of structural steel or other metal framing systems. Furnish all welding, shop priming and include installation as required to complete work.
2. **Welds:** Welds shall be ground smooth, all weld splatter removed. All work and materials shall meet the latest edition performance standards of the "American Welding Society, Inc." - AWS.
3. **Materials:** See drawings or shop drawings by others for sizes, material and attachments. All hardware connectors subject to weather/moisture exposure shall be hot dipped galvanized or properly primed and painted to prevent rust or corrosion. Owner/Client shall provide a metal specialist to review locations of all ornamental and miscellaneous metal subject to weather/moisture exposure and shall specify materials and/or treated with protective coating so as to prevent rust or corrosion.
4. **Work by Others:**
   A. All blocking to receive attachments shall be provided under rough carpentry.
   B. All elastomeric membrane and flashing shall be confirmed by wrought iron contractor prior to installation of materials.
5. **Shop Drawings:** Contractor shall submit shop drawings of decorative iron work to Owner/Client and Architect for review for conformance with visual design concept prior to fabrication.

SECTION 5B -- STRUCTURAL STEEL (If required by structural engineering.)

1. **Scope:** Furnish all structural steel sections, bolts, plates, stud bolts, stairs, installation templates, etc. as shown in structural drawings and details as required to complete work.
2. **Standards:**
   A. Fabrication and erection shall comply with the latest A.I.S.C. specifications.
   B. All bolts for steel members shall conform to A.S.T.M. A-307 unless otherwise noted.
   C. Welding shall be by the electric shielded ARC process, done by a certified welder approved by the building department.
   D. Where finish is attached to structural steel, provide 1/2" bolt holes at 4'-0" O.C. for attachment of nailers or stud bolts at 24" O.C. unless noted otherwise. See architectural drawings for finishes. Any discrepancies in the finished structural steel dimensions and the ability to provide necessary nailers for finishes shall be brought to the Architect's attention prior to fabrication.
   E. All field welding shall have continuous inspection.
3. **Materials:**
   A. Structural steel shall conform to standard specifications for structural steel for bridges and buildings A.S.T.M. A-36.
   B. Hi-tensile bolts, where indicated on the plans or details, shall be the friction type and there shall be no paint, oil, lacquer or galvanizing between the contact surfaces. Hi-tensile bolts shall conform to A.S.T.M. A-325 or A.S.T.M. A-490.
   C. Pipe columns shall conform to A.S.T.M. A-53-B type E or S.
   D. Tube columns shall conform to A.S.T.M. A-501 or A-500 grade B.
4. **Shop Drawings:** Submit 1 set to Owner/Client, 1 set to Structural Engineer and 1 set to Architect for review for conformance with the visual design concept prior to fabrication.

SECTION 6A - ROUGH CARPENTRY: REFER TO STRUCTURAL DRAWINGS AND TRUSS DRAWINGS BY OTHERS FOR LUMBER AND GRADING SPECIFICATIONS TO BE USED ON THIS PROJECT

FOR ALL NON-STRUCTURAL CARPENTRY:

1. **Scope:**
   A. Laying out of work, rough trim, siding, etc.
   B. Furnish and install all screws, nails, straps, mastic for mudsills, elastomeric sealant/caulking, building paper, self sealing elastomeric membrane, flashing material and all necessary equipment. General contractor shall be responsible for sequencing and protection of weatherproofing materials from deterioration or damage caused by other trades, vandalism, wind, rain, U.V. rays and heat, prior to them being covered.
   C. Install all interior and exterior standing and running trim, shelving, boarding and all building specialties. Install all rough backing for finish attachments and finish materials. Install all aluminum or vinyl windows and aluminum or vinyl sliding doors including caulking/sealant.
   D. The General Contractor shall determine the location of full height balloon framed walls in accordance with the highest standard of construction and framing practices.
   E. Install elastomeric membrane waterproofing per details and per Section 7D.
2. **Grading Standards:**
   A. Framing lumber: Each piece of lumber shall bear grade mark of appropriate agency.
   B. Wood Sheathing Panels: Shall bear the mark of "American Plywood Association" - APA, and shall meet the latest edition of performance standards.
3. **Framing Materials/Grade/Specie:**
   A. **Lumber:** All lumber to be Douglas Fir or Hemlock Fir or Southern Pine (verify with Owner/Client). Wood delivered to the site shall be field tested with a hydrometer for a maximum moisture content of 19%. All wood shall be 1) adequately separated from concrete and earth, 2) shall be treated wood or; 3) wood of natural resistance to decay to protect against deterioration in accordance with Section 2307 of the U.B.C.. All wood shall be protected from landscape irrigation.
   B. **Mudsills:** Pressure treated or foundation grade redwood, set all exterior wall sills in mastic.
   C. **Vertical Framing:** No. 2 grade or better, unless noted otherwise.
   D. **Horizontal Framing:** No. 2 grade for framing lumber 2 to 4 inches wide by 2 inches and taller or No. 1 grade for all framing lumber wider than 5 inches, unless noted otherwise. Set all simple supported horizontal members with crown side up, cantilevers with crown side down.

SECTION 6A - ROUGH CARPENTRY (CONT.)

E. **Sheathing and Subfloor:**
   (1) Exposed Eaves and Rakes: 1x6 T & G Decking, or 1/2" thick, APA rated wood structural panels, A-C exterior, span rating: 24 unless detailed otherwise.
   (2) Subfloor at Interior Floors: Glue and nail. Provide "sanded face" where resilient non-textile flooring occurs. The General Contractor shall verify extent and compatibility of subfloor surface texture and material with all applied floor finishes.
   (3) Subfloor at Waterproof Floors: 3/4" thick, APA-Rated, A-C exterior, T&G, span rating 32/16 minimum or as specified by waterproof surface manufacturer. Hold deck edge level with any adjacent stair treads and feather all slope intersections along flow lines over broad areas to avoid abrupt floor breaks in surface.
   (4) Potshelves and shoulders: 1/2" thick, APA-Rated, A-C exterior grade; slope 1/4" per foot min., or as shown on drawings.

F. **Metal Connectors:** All framing connectors including but not limited to framing clips, and plywood clips as approved by the local Building Department. Installation shall be according to current manufacturers specifications. All metal connectors subject to exposure shall be galvanized, properly primed and painted or otherwise protected against rust, corrosion and deterioration. Provide rotated straps as approved by the Structural Engineer where protruding bolts cannot be simply concealed by finish materials.

G. **Interior Non-bearing Walls:** Shall have 7/32" shot pins at 48" O.C.; i.e.: Ramset per I.C.B.O. Report No. ER 1639, unless noted otherwise on structural plans.

H. **Shear Wall Material:** Shall extend the full length of wall plane to provide uniform base for finish materials.

I. No finger joint material to be used for exterior trim or framing materials.

J. All wood exposed to weather shall be Cedar, as detailed. All top surfaces to be beveled or sloped to facilitate water runoff. See drawings for size.

K. **Fascia and Barge Boards:** Kiln dried, select appearance grade, as detailed. All top surfaces to be beveled or sloped to facilitate water runoff. See drawings for size.

L. **Exterior Siding:** Horizontal hardboard siding, factory primed/sealed with embossed texture over building paper as recommended by manufacturer. Paint per Architect's color schedule. No joints in siding for wall areas less than 16' long. All hardboard type siding shall be thoroughly caulked/sealed at all joints and penetrations with P.C.B. caulking or other elastomeric non-hardening type caulking as recommended by manufacturer.

M. **Exterior Plywood:** 3/8" thick exterior grade, resawn texture one side.

N. **Exterior Decking:** 2x6 spaced decking, cedar, kiln dried, select appearance grade.

O. **Soffit at eaves and rakes:** See details. Enclosed soffits to be fireblocked per U.B.C. - Section 708.

P. **Building paper:** Per U.B.C. - Section 1402 and in compliance with U.B.C. Standard 14-1. 1 layer 15 pound (60 minute) paper minimum, at vertical walls. Provide 1 layer 30 pound felt for the first two courses from grade. Building paper shall carry continuous identification. Provide 2 layers building paper, Grade D minimum, over wood based sheathing to receive exterior lath.

Q. **Flashing at Openings:** Per U.B.C. - Section 1402 and in compliance with U.B.C. Standard 14-1. Flashing material sealed to flashing fin with minimum 2" lap at horizontal joints, minimum 6" lap at vertical joints - see details. Flashing materials shall be barrier coated reinforced and shall provide four (4) hour minimum protection from water penetration when tested in accordance with ASTM D-779 or other approved test. Flashing material shall carry continuous identification.

R. **Self-sealing elastomeric membrane:** Provide 1 layer fully adhered self-sealing elastomeric membrane at all exterior surfaces other than vertical. Provide 1 layer self-sealing elastomeric membrane behind all exposed wood trim over building paper, installed per manufacturer's recommendations. Minimum slope of substrate is 1/4" per foot. See details and Section 7D.

S. **Overlap Framing:** Overlap framing areas at roofs shall allow for openings in the roof sheathing between the main attic and overlap area as allowed by the structural engineer, to provide full attic ventilation.

T. **Trusses:**
   (1) See manufacturer's truss drawings for materials by others.
   (2) Truss manufacturer to provide 'attic' trusses and required clearance for horizontal F.A.U.s.

U. **Grab Bar Reinforcement:** Provide solid backing at future grab bar mounting points at units where disabled access is required. See drawings.

V. **Nailing Schedule:** Per U.B.C.-Table 23-II-B for common or box nails. If alternate nails are used, contractor shall submit I.C.B.O. approved test reports of specified nail type along with alternate nail specifications for Structural Engineer's review prior to field use.

TABLE 23-II-B-1 NAILING SCHEDULE

CONNECTION	NAILING
1. Joist to sill or girder, toenail	3-8d
2. Bridging to joist, toenail each end	2-8d
3. 1" x 6" (25mm x 152 mm) subfloor or less to each joist	2-8d
4. Wider than 1" x 6" (25 mm x 152 mm) subfloor to each joist, face nail	3-8d
5. 2" (51 mm) subfloor to joist or girder, blind and face nail	2-16d
6. Sole plate to joist or blocking, typical face nail	16d at 16" (406 mm) o.c.
Sole plate to joist or blocking, at braced wall panels	3-16d per 16" (406 mm)
7. Top plate to stud, end nail	2-16d
8. Stud to sole plate	4-8d, toenail or 2-16d, end nail
9. Double studs, face nail	16d at 24" (610 mm) o.c.
10. Double top plates, typical face nail	16d at 16" (406 mm) o.c.
Double top plate, lap splice	8-16d
11. Blocking between joists or rafters to top plate, toenail	3-8d
12. Rim joist to top plate, toenail	8d at 6" (152 mm) o.c.
13. Top plates, laps, and intersections, face nail	2-16d
14. Continuous header, two pieces	16d at 16" (406 mm) o.c. along each edge
15. Ceiling joists to plate, toenail	3-8d
16. Continuous header to stud, toenail	4-8d
17. Ceiling joists, laps over partitions, face nail	3-16d
18. Ceiling joists to parallel rafters, face nail	3-16d
19. Rafter to plate, toenail	3-8d
20. 1" (25mm) brace to each stud and plate, face nail	2-8d
21. 1" x 8" (25mm x 203mm) sheathing or less to each bearing, face nail	2-8d
22. Wider than 1" x 8" (25mm x 203mm) sheathing to each bearing, face nail	3-8d
23. Built-up corner studs	16d at 24" (610 mm) o.c.
24. Built up girders and beams	20d at 32" (813 mm o.c. at top and bottom and staggered 2-20d at ends at each splice
25. 2" (51mm) planks	2-16d at each bearing
26. Wood structural panels and particleboard:[2]	
Subfloor and wall sheathing (to framing):	
1/2" (12.7mm) and less	6d[3]
19/32" - 3/4" (15mm-19mm)	8d[4] or 6d[5]
7/8" - 1" (22mm-25mm)	8d[3]
1 1/8" - 1 1/4" (29mm-32mm)	10d[4] or 8d[5]
Combination subfloor - underlayment (to framing):	
3/4" (19mm) and less	6d[5]
7/8" - 1" (22mm-25mm)	8d[5]
1 1/8" - 1 1/4" (29mm-32mm)	10d[4] or 8d[5]
27. Panel siding (to framing):	
1/2" (12.7 mm) or less	6d[6]
5/8" (16 mm)	8d[6]
28. Fiberboard sheathing:[7]	
1/2" (12.7 mm)	No. 11 ga.[8]
	6d[4]
	No. 16 ga.[9]
25/32" (20 mm)	No. 11 ga.[8]
	8d[4]
	No. 16 ga.[9]
29. Interior paneling	
1/4" (6.4 mm)	4d[10]
3/8" (9.5 mm)	6d[11]

1 Common or box nails may be used except where otherwise stated.
2 Nails spaced at 6 inches (152 mm) on center at edges, 12 inches (305 mm) at intermediate supports except 6 inches (152 mm) at all supports where spans are 48 inches (1219 mm) or more. For nailing of wood structural panels and particleboard diaphragms and shear walls, refer to Sections 2315.3. and 2315.4. Nails for wall sheathing may be common, box, or casing.
3 Common or deformed shank.
4 Common.
5 Deformed shank.
6 Corrosion resistant siding or casing nails conforming to the requirements of Section 2304.3.
7 Fasteners spaced 3 inches (76 mm) on center at exterior edges and 6 inches (152 mm) on center at intermediate supports.
8 Corrosion resistant roofing nails with 7/16 inch diameter (11 mm) head and 1 1/2 inch (38 mm) length for 1/2 inch (13 mm) sheathing and 1 3/4 inch (44 mm) length for 25/32 inch (20 mm) sheathing conforming to the requirements of Section 2325.1.
9 Corrosion resistant staples with nominal 7/16 inch (11 mm) crown and 1 1/8 inch (29 mm) length for 1/2 inch (12.7 mm)sheathing and 1 1/2 inch (38 mm) length for 25/32 inch (20 mm) sheathing conforming to the requirements of Section 2304.3.
10 Panel supports at 16 inches (406 mm) [20 inches (508 mm) if strength axis in the long dimension of the panel, unless otherwise marked]. Casing or finish nails spaced 6 inches (152 mm) on panel edges, 12 inches (305 mm) at intermediate supports.
11 Panel supports at 24 inches (610 mm). Casing or finish nails spaced 6 inches (152 mm) on panel edges, 12 inches (305 mm) at intermediate supports.

DANIELIAN ASSOCIATES
ARCHITECTURE & PLANNING

SIXTY CORPORATE PARK
IRVINE, CALIFORNIA 92606
(949) 474-6030
FAX: (949) 474-1422
WWW.DANIELIAN.COM

© DANIELIAN ASSOCIATES EXPRESSLY RESERVES ITS COMMON LAW COPYRIGHT AND OTHER PROPERTY RIGHTS IN THESE PLANS. THESE PLANS ARE NOT TO BE REPRODUCED CHANGED OR COPIED IN ANY FORM OR MANNER WHATSOEVER, NOR ARE THEY TO BE ASSIGNED TO ANY THIRD PARTY WITHOUT FIRST OBTAINING THE EXPRESSED WRITTEN PERMISSION AND CONSENT OF DANIELIAN ASSOCIATES.

REGISTERED PROFESSIONAL ARCHITECT
ARTHUR C. DANIELIAN
Reg. No. C 4820
STATE OF CALIFORNIA

NO.	DATE	REVISION

PROJECT TITLE
ARTISAN COLLECTION

PROJECT NO. 00052

SHEET TITLE
GENERAL NOTES

ORIGINAL DATE:
©
©
©
©

PRINT DATE

SHEET NO. G-3

SECTION 6A - ROUGH CARPENTRY (CONT.)

4. **Framing:**
   - A. Blocking and Bridging:
     - (1) Stud Walls: Per section 2320, U.B.C.. Full height walls shall have continuous studs from bottom to top plates.
     - (2) Ceiling Joists: Per section 2320 and 2306, U.B.C.. Use solid bridging.
     - (3) Backing: Provide solid backing at all pendant or surface-mounted electrical fixtures, rails, grab bars, bath accessories, etc..
   - B. Firestopping: Per section 709, U.B.C..
   - C. Draft Stops: Per 709.3 U.B.C.. Where there is usable space above and below the concealed space of a floor ceiling assembly, draft stops shall be installed so that the area of the concealed space does not exceed 1,000 square feet. Draftstopping shall divide the concealed space into approximately equal areas.
   - D. Stud Walls: Per section 2320, U.B.C.. All studs to have full bearing on plate. All studs to be at 16" O.C. unless noted otherwise. Studs to be sized per requirements of Section 2320 U.B.C.
   - E. Use continuous, full height, ballooned framed studs in accordance with the highest standard of construction and framing practices.
   - F. All angled walls to be at 45 degrees unless noted otherwise.
   - G. Built up roofs, waterproof balcony decks and exterior horizontal areas "i.e., potsheives and shoulders" are to be framed with slope to ensure water drainage without puddling.
   - H. Provide crickets as indicated and as necessary for proper water drainage and to re-direct channeled or run off water away from vertical surfaces.
   - I. Provide stripping where required to provide uniform surface where flush joists and beams are different depths.
   - J. Use "Gang Nail" straps at bottom of fascia splices and corners.
   - K. Use mitered joints at fascia splices.
   - L. All dimensions given are to face of framing, unless noted otherwise.
   - M. Align bottom of all adjacent window and door headers, unless noted otherwise on framing plan.
5. **Trusses:**
   - A. The General Contractor shall coordinate the installation of all ceiling drops with the Truss Manufacturer and the Framing Contractor.
   - B. Where truss framing and conventional framing occur together in a continuous roof plane, the General Contractor shall coordinate with the Truss Manufacturer and Framing Contractor to eliminate differential deflection between the truss and conventional framemembers.
   - C. Where truss framing and conventional framing occur together in the same roof, the plate height as noted will be maintained for the deeper conventional member with the bottom truss cord matching the rafter seat cut. Truss manufacturer shall provide heel as required to maintain continuous roof plane alignment.
   - D. The General Contractor shall have City/County approved truss plans on the job site prior to foundation inspection. The Truss Manufacturer shall submit calculations, shop drawings, details, bridging and erection bracing signed by a registered Engineer to the Building Department and Structural Engineer, for their review prior to fabrication. One set of shop drawings shall be submitted to the Architect for review for conformance with the visual design concept prior to truss fabrication.
   - E. The Truss Manufacturer shall be responsible for framing around openings in the roof or floor, shall provide ladder framing at non-standard truss member spacing to keep within the span rating of the roof or floor sheathing and shall submit details and hangers as required.
   - F. The Truss Manufacturer shall be responsible for verifying the location, size and weight of attic located mechanical equipment and incorporate such information including required clearances into the design and calculation of trusses supporting it, including attic accesses.
   - G. Non-bearing walls shall be held short to allow for rafter-truss deflection with clips approved by the Structural Engineer to stabilize the wall.
   - H. Truss manufacturer shall provide members of adequate bearing area in such a width to insure against over-stressing of supporting timber, multiple joists, girders and plates or provide bearing plates and details to do same.
   - I. The General Contractor shall coordinate with the Truss Manufacturer, Framing, Electrical, Plumbing and Mechanical Contractors at fire protected areas to maintain required fire protection without penetrations unless allowed by code and local jurisdiction.

SECTION 6B - FINISH CARPENTRY

1. **Scope:**
   - A. Furnish and install all finish carpentry complete, including trim, door frames, paneling and shelving.
   - B. Installation of finish hardware, bath accessories, cabinet pulls, etc.
2. **Workmanship:**
   - A. All joints shall be tight and true and securely fastened. Corners shall be neatly mitered, butted, or coped, with nails set and surfaces free of tool marks.
   - B. Wood work shall be accurately scribed to fit adjoining surfaces.
   - C. All work shall be machined or hand-sanded, sharp edges and splinters removed, and completely prepared for finish.
   - D. Full length continuous boards shall be used wherever applicable or specifically noted.
3. **Fitting and Hanging Doors:**
   - A. Each door shall be accurately cut, trimmed, and fitted to its respective frame and hardware with due allowance for painter's finishes.
   - B. Clearance at the lock and hanging stiles and at the top shall not exceed 1/8". Clearance at the bottom shall be adjusted for finish floor covering scheduled, including carpeting.
   - C. Lock stile edges shall be beveled.
   - D. Door shall operate freely, but not loosely, without sticking or binding, without hinge bound conditions; and with all hardware properly adjusted and functioning.
4. **Materials:**
   - A. Door Frames:
     1. Frames shall be set plumb and true, rigidly secured, and protected during the course of construction.
     2. Kiln dried vertical grain Douglas Fir, "B" or better.
   - B. Door Stops and Casing: Clear pine. Size and profile as selected by Owner/Client.
     1. All vertical and horizontal trim members shall be in longest practicable lengths.
   - C. Shelving: 15" deep at wardrobes unless noted otherwise. Particle board, edge banded or ix clear pine.
   - D. Shelf Pole: 1 3/8" diameter, solid wood. Double pole as indicated with "DBL P" on drawings.
   - E. Shelf and Pole: Metal shelf and pole system as selected by Owner/Client. Provide double pole as indicated with "DBL P" drawings.
   - F. Wood Base: 2-1/4" high colonial profile clear pine with shoe moulding at sheet vinyl window casing as detailed or as noted otherwise.
   - G. Interior Wood Trim:
     1. Wood rails - clear material, finished to match casework.
     2. Window stool and apron - ix clear pine to match casework (verify with Owner/Client).

SECTION 6C - CABINETS

1. **Scope:** Furnish and install all cabinet work complete. Verify all dimensions by taking field measurements prior to fabrication/installation. Verify appliance and fixture sizes with Owner/Client and supplier prior to fabrication.
2. **Standards:**
   - A. All work and materials shall meet the latest edition performance standards of the "National Kitchen Cabinet Association" - NKCA. Owner/Client selected panel doors, unless noted otherwise.
3. **Workmanship:**
   - A. All joints shall be tight and true and securely fastened. Corners shall be mitered, butted, or coped, nails set, and surfaces free of tool marks.
   - B. Use concealed fastenings where possible.
   - C. All cabinet work scheduled for paint or stain finish shall be smoothly dressed and sanded.
   - D. Install all work level, plumb and true. Scribe members accurately in place to fit adjoining surfaces.
   - E. Cabinets scheduled for paint finishes shall be primed and back-painted prior to installation.
   - F. Plywood and particle board shelves shall be hardwood edge banded on all exposed edges.
4. **Materials and Design:** as selected by Owner/Client.
5. **Hardware:** Shall be selected by Owner/Client.
6. **Counter Tops:** Shall be selected by Owner/Client.

SECTION 6D - MOLDED/FORMED MILLWORK

1. **Scope:** Furnish and install all molded millwork complete.
2. **Installation:**
   - A. Installation and finish application per manufacturers recommendations including backing/support, joint reinforcing, surface preparation and adhesives/attachment.
   - B. Product to be compatible with exterior use, adjacent finishes and of sufficient structural strength for location used.
3. **Materials:** Provide molded shapes to receive exterior finish as indicated in drawings and details. Install expanded polystyrene by Vato Incorporated, molded polyurethane foam by Nasco Manufacturing Inc., molded high density polymer by Fypon Molded Millwork or Owner/Client selected substitute. Provide reinforced finish as required at human traffic locations subjected to bumping, scraping, denting, etc. Provide Type II - high density foam at all trim applications.

SECTION 7A - ROOFING AND WATERPROOFING

1. **Scope:** Furnish and install roofing and waterproofing work complete, including cant strips and incorporating other trades flashing, sleeves and jacks. General contractor shall be responsible for sequencing and protection of weatherproofing materials from deterioration due to wind, rain, U.V. rays and heat, prior to them being covered.
2. **Standards:** All work and materials shall meet the latest edition performance standards of the "National Roofing Contractors Association" - NRCA and "Asphalt Roofing Manufacturers Association" - ARMA.
3. **Installation:** Install roofing and wall corrosion resistant metal flashing per manufacturer's recommendations including the use of fasteners and anchoring devices in high wind areas, and per U.B.C., Chapter 15, carefully incorporating elastomeric membranes, flashing, scuppers, jacks, sleeves, roof drains, skylights, etc., supplied by others.
4. **Inspection:** Owner/Client shall provide a Waterproofing Specialist to review built-up roofing, waterproof decking, foundation wall waterproofing, and flashing details and provide continuous inspection during field installation of all waterproof and flashing surfaces and materials to insure adherence to manufacturer's specifications and the highest standards of construction practice.
5. **Special Conditions:**
   - A. Provide cant strips at all vertical surfaces.
   - B. Provide crickets as indicated, and as necessary for proper water drainage and to re-direct channeled or runoff water away from vertical surfaces.
   - C. Roofing contractor shall be responsible for determining that appropriate fasteners are used for the project wind conditions.
6. **Materials:** as selected by Owner/Client
   - A. Composition Shingles: Class "A" rated roof assembly. Apply over one layer, 15 pound felt underlayment in accordance with manufacturer's specifications: color, texture, and pattern to be selected by Architect, refer to color schedule.
     - OR
   - B. Built-up Composition Roof: Class "A" rated roof assembly. Four layer, 15 pounds felt, 25 pounds hot mopping between layers and 60 pounds flood coat with 400 pounds pea gravel surface, slope solid edge blocked roof 1/4" per foot minimum for water drainage. Color selected by Architect, refer to color schedule.
     - OR
   - C. Tile Roof: Class "A" rated roof assembly. (Pioneer Roofing Tile, Inc., Report No., ER-4846) (Eagle Roofing Products, Report No ER-4660) (Monier Lifetile, Inc., ICBO Research Report No. ER-2098) (U.S. Tile Co., ICBO Research No. ER-3523) approx. 4.5 lbs. per sq. ft. as selected by Owner/Client. Install over minimum 30 pound felt or per manufacturer's specifications. Color, texture and pattern as selected by the Architect. Refer to color schedule.
     - OR
   - D. U.L. Class "B" rated roof assembly per Kopper's Fire Retardant treated Western Red Cedar Shake Roof System. Install per manufacturer's recommendations.
     - OR
   - E. Metal Roof: Seamless, (standing seam) pre-painted, corrosion resistant (copper) painter shall provide patina copper finish, product used to be approved by Owner/Client metal roof, apply over one layer 15 pound felt underlayment in accordance with manufacturer's specifications. Slope 1" per foot minimum or as detailed.
   - F. Waterproof Decking: Class "A" rated fire assembly. Furnish and apply balcony deck covering complete and watertight, as recommended by the manufacturer. Install Owner/Client selected, I.C.B.O. approved, traffic bearing elastomeric membrane deck system by "Dex-O-Tex", "Mer-Kote" or Owner/Client selected substitute. Strictly follow all recommendations regarding stability of floor, positive slope away from living areas, flashing at all edge and corner conditions, reinforcing tape at subfloor joints, and metal reinforcing at inside or outside "i.e., stair nosing" corners, etc. Waterproof deck shall be flood tested. Color and texture as selected by the Architect, refer to color schedule.
   - G. Foundation Wall Waterproofing: Install complete, and Owner/Client selected, I.C.B.O. approved waterproofing system where indicated in drawings. Protect waterproofing material during backfilling operations with non-deteriorating protection board. Refer to Section 2A-4.C for nuisance water drainage system information.
   - H. Flashing: 26 gauge corrosion resistant metal min., lap joints and fill with roofing cement, unless noted otherwise.
   - I. Elastomeric Membranes: Install per details and per Section 7D.
   - J. Roofing Nails: Corrosion resistant, sized for U.B.C. requirements and local wind conditions.
   - K. Gutters and Downspouts: See Section 7B.

SECTION 7B - SHEET METAL

1. **Scope:**
   - A. Provide miscellaneous corrosion resistant metal work as indicated and specified, including flashing, gravel stops, sillpans, scuppers, gutters, downspouts laundry chutes and miscellaneous vents.
   - B. Provide all flashing and counterflashing items as indicated in continuous pieces where possible and as required to make work completely waterproof using the highest standards of construction practice.
   - C. Flash and counterflash at all roof to wall conditions. Flash and caulk wood beams and outlookers projecting through exterior walls or roof surfaces.
   - D. Flash all exterior trim, door and window openings with approved method and materials which conforms to standards of local and applicable codes and as detailed.
   - E. Incorporate elastomeric membranes materials per details and per Section 7D.
2. **Standards:** All work and materials shall meet the latest edition performance standards of the "Sheet Metal and Air Conditioning Contractors National Association, Inc." - SMACNA.
3. **Workmanship:**
   - A. Work shall be accurately fabricated to match detail and fitted to job conditions.
   - B. Molded and brake-formed members shall be finished true and straight with sharp lines and angles.
   - C. Lock seams flat and true to line, 1/2 inch wide, sweated full with solder where overlapping does not provide water tight connection.
   - D. Sheet metal work shall be designed to provide complete weathertight and waterproof connections.
   - E. All galvanized metal shall be shop primed with one coat of zinc dust-zinc oxide primer over all surfaces and as recommended by metal specialist.
   - F. Sheet metal used as flashing adjacent to wood surfaces shall be set in high quality sealant to insure waterproofing between such materials.
4. **Materials:**
   - A. Sheet metal and flashing to be corrosion resistant metal as specified by Owner/Client provided metal specialist.
   - B. Minimum thicknesses: Not less than No. 26, U.S. gauge.
   - C. Flashing and sheet metal thicknesses shall be appropriate for the specific condition in accordance with the recommendations of the "Architectural Sheet Metal Manual" but in no case less than the listed minimum or per requirements of the U.B.C..
   - D. Solder and flux if necessary: 50% lead, 50% tin, standard brand solder. Flux shall be muriatic acid.
   - E. Fasteners: Corrosion resistant screws and other fasteners compatible for use with base metal used for steel metal and flashing.
   - F. Elastomeric membrane: See Section 7D.
5. **Gutters and Downspouts:** Provide corrosion resistant gutters and downspouts as required by the Soils Report and as noted on roof plan. Downspouts shall discharge into a separate subsurface drainage system or onto splash block locations approved by the Civil and Soils Engineers. Downspouts shall not discharge onto waterproof walking surfaces, access paths, stairs or into planting areas adjacent to structural foundations.
6. **Attic Vents:**
   - A. Provide attic cross ventilation at all attic areas per most stringent requirements of applicable City, County, U.B.C. or roof material manufacturer. Vent openings shall be covered with corrosion resistant metal mesh with mesh openings of 1/4" in dimension. The General Contractor shall notify the Architect should any enclosed area be discovered in the field for which required ventilation has not been provided prior to the application of finish materials.
   - B. Pitch Roof: Provide ion profile screened dormer vents (vent tiles) see drawings for locations and size.
   - C. Eaves: (4)1-1/2" diameter screened openings at frieze block per truss rafter space. Opening locations must be compatible with structural drawings and details. Discrepancies shall be brought to the Architect's attention in a timely manner. 3" continuous screened soffit vent as detailed or Owner/Client selected substitute.
   - D. Gable End: Screened with louver blade profile to prevent intrusion of wind driven rain into interior space. See drawings for size and location.
   - E. Soffit: Screened vents - see drawings for size and locations.
   - F. All venting to be in conformance to acoustical requirements as indicated in acoustical report.
7. **Dryer Vents:** Vent dryer to outside air with minimum 4" diameter smooth metal duct with back draft damper per U.M.C., manufacturers specifications and local jurisdictional requirements. Length of run and number of bends to be minimized. Duct runs exceeding maximum allowed by code or manufacturer shall be oversized to insure adequate air flow.
8. **Crawlspace "Foundation" Vents/Access:** Provide cross ventilation at all enclosed areas exposed to grade per code requirements of the U.B.C. Section 2517. Vent openings shall be covered with corrosion resistant metal mesh with mesh openings of 1/4" dimension. The General Contractor shall notify the Architect should any enclosed area be discovered in the field for which required ventilation has not been provided prior to application of finish materials. Provide minimum 24"x18" access hole per requirements of the U.B.C..

SECTION 7C - INSULATION

1. **Scope:** Furnish and install thermal and sound insulation complete, including all Energy Compliance requirements OR insulation requirements indicated in CF-1R forms to supersede all information given.

SECTION 7C - INSULATION (CONT.)

2. **Installation:**
   - A. Thermal Insulation: Install batts between joists, at all ceiling areas exposed to roof or attic areas including any vertical wall areas separating living spaces from attics between ceilings and roof -knee walls - and between studs at all exterior walls. Batts shall be securely installed and tightly fitted without compressing the normal loft hickness. Provide insulation stops/baffles as required to prevent obstruction of vents.
   - B. Sound Insulation: Install batts between studs, securely and tightly fitted at walls as indicated on drawings.
   - C. Plumbing Insulation: Fully insulate all stud and floor cavities containing waste lines from foundation to floor above.
3. **Materials:**
   - A. Thermal Insulation:
     1. See energy compliance report and section notes.
   - B. Blown Insulation: Uniformly distributed with minimum weight consistent with requirements and manufacturer's label.
   - C. Foam Insulation: Expansive types used to seal the exterior building envelope per energy requirements must be compatible for use with adjacent materials (i.e., window frames) and installed so as not to interfere with installation of finish materials.
   - D. Plumbing Insulation: Use R-11 batt insulation to fill stud or floor cavity.
   - E. Furnace Rooms: R-11 batts for sound control. Line cold air return plenum under furnace with black duct liner - adhesive applied.
   - F. Sound insulation when indicated on floor plan adjacent to living areas: Minimum R-11.

SECTION 7D - ELASTOMERIC MEMBRANE

1. **Scope:**
   - A. Provide fully adhered self-sealing elastomeric membranes as indicated in continuous pieces where possible and as required to make work completely waterproof using the highest standards of construction practice.
   - B. All general requirements as printed in the current W.R. Grace Waterproofing Products Manual are incorporated in these notes.
   - C. Provide fully adhered self-sealing elastomeric membranes as indicated in details and in areas which conform to standards of local construction practice, including any and all horizontal surfaces in order to meet applicable code requirements.
2. **Standards and Installation:**
   - A. Install fully adhered self-sealing elastomeric membranes per manufacturer's installation recommendations, including preparation of all surfaces to receive materials, sealing of edges, sealing seams, formation of corners, protection of installed materials.
   - B. Any contractor or sub-contractor shall confirm the existence of adequate slope for drainage prior to installation of elastomeric membrane material.
3. **Materials:**
   - A. Fully adhered self-sealing elastomeric membranes referred to in these Notes and in details refer to "Grace Ice & Water Shield", manufactured by W.R. Grace & Co.- Conn, Construction Products Division.
   - B. Use all primers and surface preparation materials recommended by manufacturer.

SECTION 7E - SKYLIGHTS

1. **Scope:** Furnish and install skylights per manufacturers specifications where indicated in drawings.
2. **Materials:**
   - A. "Bristolite" low profile skylight, by Bristol Fiberlite Industries, I.C.B.O. No. ER-2469 or Owner/Client selected substitute. Size as indicated in drawings.

SECTION 8A - FINISH HARDWARE

1. **Scope:** Furnish all finish hardware complete. Each living unit shall be keyed separately.
2. **Type:** As selected by Owner/Client.
3. **Finish:** As selected by Owner/Client.

SECTION 8B - DOORS

1. **Scope:**
   - A. Furnish and install all doors complete as indicated on plans. The General Contractor shall coordinate Door Supplier and Framing Contractor for installation of all doors.
   - B. Provide elastomeric membrane materials per details and Section 7D.
2. **Standards and Installation:** Per manufacturer's installation recommendations. Door assemblies shall meet or exceed a design wind pressure of 20 P.S.F. All exterior doors shall comply with mandatory infiltration standards. All exterior doors to be in conformance with acoustical requirements as indicated in acoustical report AND/OR See security requirements.
3. **Measurements:** Verify all dimensions by taking field measurements prior to installation.
4. **Type & Sizes:** As indicated in drawings.
5. **Materials:** as selected by Owner/Client.
   - A. Glass in Hazardous Areas: Provide tempered glass per Chapter 24, U.B.C. as indicated in drawings and as necessary. All glass in operable doors shall be tempered.
   - B. Louvered Doors: Size and material to match typical interior doors. Louvers provided at service rooms shall provide a minimum 100 sq. in. net opening for make up air as required by U.M.C. Section 908.
   - C. Water Heater/FAU Compartment Doors: Shall be weatherstripped to separate unconditioned spaces receiving combustion air from conditioned spaces.
   - D. Garage Door to Living Unit: 1-3/8" (verify with security requirements) thick, solid wood or 20 minute fire rated, tight fitting door with self closer, R-3/U-1.
   - E. Meter Enclosure Door: enclosure doors shall be vented and/or provided with view plates as required by utility company.
   - F. Wood exterior and swinging doors shall be capped with painted corrosion resistant metal flashing to match door, be provided with self closer or Owner/Client selected substitute to prevent water intrusion into door edge.

SECTION 8C - WOOD WINDOWS

1. **Scope:**
   - A. Furnish and install all wood windows complete as indicated on plans. The General Contractor shall coordinate Window Supplier and Framing Contractor for installation of all windows.
   - B. Provide elastomeric membrane materials per details and Section 7D.
2. **Standards and Installation:** All work and materials shall meet the latest edition performance standards of the "National Wood Window and Door Association" - NWWDA. Installation per manufacturer's recommendations. Window assemblies shall meet or exceed a design wind pressure of 20 P.S.F. All joints and penetrations around windows and doors shall be caulked and sealed (non-hardening) per state energy requirements. Lapping and sealing of nailing fins to flashing material and lapping to building paper shall be in accordance with code minimums, manufacturer's literature, the California Association of Window Manufacturers or State Trade Association recommendations. Align bottom of headers at all adjacent windows and doors unless noted otherwise on framing plan. All windows to be in conformance with acoustical requirements as indicated in acoustical report AND/OR See security requirements.
3. **Measurements:** Verify all dimensions by taking field measurements prior to installation.
4. **Materials:** as selected by Owner/Client.
   - A. Glass in hazardous areas: Provide tempered glass per Chapter 24 U.B.C. requirements, as indicated in drawings and as necessary.
5. **Egress:** Manufacturer/supplier shall provide windows that meet all emergency exiting requirements of the U.B.C. and notify Architect if drawings are in conflict prior to fabrication or delivery.
   - OR

SECTION 8C - VINYL DOORS AND WINDOWS

1. **Scope:**
   - A. Furnish and install all vinyl or aluminum doors and windows complete as indicated on plans. The General Contractor shall coordinate Window Supplier and Framing Contractor for installation of all windows and doors.
   - B. Provide elastomeric membrane materials per details and Section 7D.
2. **Standards and Installation:** Per manufacturer's installation recommendations. Window and door assemblies shall meet or exceed a design wind pressure of 20 P.S.F. All windows and doors shall comply with mandatory state infiltration standards. All joints and penetrations around windows and doors shall be caulked and sealed (non-hardening) per state energy requirements. Lapping and sealing of nailing fins to flashing material and lapping to building paper shall be in accordance with code minimums, manufacturer's literature, the California Association of Window Manufacturers or State Trade Association recommendations. Align bottom of headers at all adjacent windows and doors unless noted otherwise on framing plan. All windows shall be in conformance with acoustical requirements as indicated in acoustical report AND/OR See security requirements.)

SECTION 8C - VINYL DOORS AND WINDOWS (CONT.)

3. **Measurements:** Verify all dimensions by taking field measurements prior to installation.
4. **Type & Sizes:** As indicated on the drawings.
5. **Materials:**
   - A. Glass in hazardous areas: Provide tempered glass per Chapter 24 U.B.C. requirements, as indicated in drawings and as necessary. All operable doors to be tempered.
   - B. Aluminum or Vinyl sliding doors: Complete with aluminum or vinyl screen; white finish, install with threshold (sill) pans.
   - C. Aluminum or Vinyl operable windows: Complete with aluminum or vinyl screen; white finish.
   - D. Aluminum or Vinyl fixed sash: Match operable windows.
6. **Egress:** Manufacturer/supplier shall provide windows that meet all emergency exiting requirements of the U.B.C. and notify Architect if drawings are in conflict prior to fabrication or delivery.
7. **Flashing Material:** See Section 6A.

SECTION 8D - GLASS AND GLAZING

1. **Scope:** Furnish and install all glazing and mirrors other than factory glazed door and windows. Glazing shall be done during finish work.
2. **Standards:**
   Calculations. Glazing at exterior openings shall bear a label certifying the corresponding "U" value AND/OR See security requirements.
3. **Materials:** Glass and Glazing as per Chapter 24 of the U.B.C. and Energy Compliance
   - A. Glass in hazardous areas: Provide tempered glass per Chapter 24 U.B.C. requirements, as indicated in drawings and as necessary. All operable doors to be tempered.
   - B. Fixed and Operable Windows: Single strength "B" or better. Dual glazed typical unless noted otherwise in energy calculations. Divided lites as shown on exterior elevations. All windows clear glass, unless noted otherwise.
   - C. Doors: 5/16" thick tempered glass. Dual glazed typical. Divided lites as shown on exterior elevations.
   - D. Mirrors: 1/4" polished plate. See interior elevations for size.
   - E. Shower Enclosures: Approved tempered, shatter proof, obscure, (clear at models).
   - F. Obscure Glass: See plan for locations.
   - G. Mirrored wardrobe doors: Safety glass per U.B.C. requirements.
   - H. Glass or Acrylic Block: Minimum 3" thick, sized as indicated on plans. Pattern to be wave/distorted or Owner/Client selected. Block to be factory set in manufactured window frame complete. Install flashing material, reinforcing, expansion material, grout/mortar and sealant as recommended by manufacturer. With minimum 20 minute fire rating and frame assembly.
   - I. Fire Rated: 1/4" thick wire glass in fixed metal frame Per U.B.C. requirements with minimum 20 minute fire rating.
   - J. Caulking Compound: Gun applied non-hardening, non-mildewing.

SECTION 8E - WEATHERSTRIPPING AND THRESHOLDS

1. **Doors:** All doors separating conditioned space from unconditioned space shall be fully weatherstripped with mortise-type as manufactured by "Pemko" or Owner/Client selected substitute.
2. **Thresholds:**
   - A. Aluminum, bronze anodized, to meet all applicable disabled accessible route requirements where required.
   - B. Thresholds to be separated from direct contact with concrete as required to prevent corrosion.
   - C. Thresholds shall be set in corrosion resistant sillpans, caulked and sealed or otherwise installed to prevent water intrusion.
   - D. Provide elastomeric membrane materials per details and Section 7D.

SECTION 8F - GARAGE DOOR HARDWARE

1. **Scope:** Furnish and install all door hardware complete and operational. Doors shall be adjusted and counterbalanced for proper operation. See security requirements.
2. **Materials:**
   - A. Provide: door hardware.
   - B. Doors to be operated by automatic garage door opener with 2 transmitters as selected by Owner/Client.
   - C. Lock: Center keyed lock with tree spinning handle or as required by local security requirements.
   - D. Springs and containment devices: Shall be permanently labeled to indicate the maximum recommended stretch of springs and that they have been manufactured in accordance with requirements of the California Department of Housing and Community Development.

SECTION 9A - STUCCO

1. **Scope:**
   - A. Furnish and install all plastering work complete, including grounds, screeds, expansion joints, casing, corner guards, etc.
   - B. Provide elastomeric membrane materials per details and Section 7D.
   - C. Provide elastomeric membrane at all penetrations of stucco and water-resistive membrane.
2. **Standards:**
   - A. All work and materials shall meet the latest edition performance standards of the "Plastering Information Bureau" - PIB and the "Lathing and Plastering Contractor's Association" - LPCA.
   - B. All work shall comply with Chapter 25 of the U.B.C..
   - C. All work shall comply with the installation standards of the manufacturer of the plaster (insulation) products provided.
   - D. Application of waterproof barrier shall be the responsibility of Owner/Client based on the recommendations of the stucco manufacturing representative.
   - E. Provide elastomeric membrane materials per details and Section 7D.
   - F. Slope of Substrade: If not noted on drawings, the minimum slope of substrate on which stucco may be applied is 1/4" per foot.
3. **Materials - 1 Coat Exterior Plaster:**
   - A. Walls: 1/4" to 3/8" thick acrylic modified cement stucco impregnate with integral color with 1/2-inch alkali-resistant chopped fiberglass applied to corrosion resistant metal wire mesh over one-inch thick polystyrene over 1 layer 15 pound felt minimum, at walls, 1 layer elastomeric membrane at surfaces other than vertical on all exterior framed areas as indicated in drawings. Paint at accent only.
   - B. Corrosion resistant J metal weep screed at foundation as detailed.
   - C. Corners: All outside corners to be reinforced with bullnosed corner guards OR with 90 degree right angle corner guards.
   - D. Decorative corrosion resistant metal channel screeds: As indicated on plans and as detailed.
   - E. Finish: As selected by Architect. Provide Architect with minimum 24"x24" field applied sample prior to field application on units. Color as selected by Architect, refer to color schedule.
   - F. Exposed Concrete Foundation: Finish color coat all exposed surfaces.
   - G. Thermal Barrier: Shall be provided between the interior of the building and foam/plastic insulation as required by U.B.C. - Section 2602.4.
   - H. Drip Screeds: Install corrosion resistant metal drip screeds at underside of all stucco soffits and recesses.
   - OR
4. **Materials - 3 Coat Exterior Plaster:**
   - A. Walls: Minimum 7/8" thick, three coat application with integral color coat (paint at accents only) over 1-1/4" corrosion resistant metal wire mesh over 1 layer 15 pound felt minimum, at walls, 1 layer elastomeric membrane at surfaces other than vertical.
   - B. Soffits: Use ii-rib lath as recommended by stucco manufacturer.
   - C. Corrosion resistant metal base screed at foundation as detailed.
   - D. Corners: All outside corners to be reinforced with bullnosed corner guards as selected by Owner/Client.
   - E. Expansion Joints: Install expansion/weep joints as recommended by Stucco Contractor. Architect to be notified of locations prior to installation.
   - F. Decorative corrosion resistant metal channel screeds: As indicated on plans and as detailed.
   - G. Finish: As selected by Architect. Provide Architect with minimum 24"x24" field applied sample prior to field application on units. Color as selected by Architect, refer to color schedule.
   - H. Drip Screeds: Install corrosion resistant metal drip screeds at underside of all stucco soffits and recesses.
   - I. Exposed Concrete Foundation: Finish color coat all exposed surfaces.

DANIELIAN ASSOCIATES
ARCHITECTURE & PLANNING
SIXTY CORPORATE PARK
IRVINE, CALIFORNIA 92606
(949) 474-6080
FAX: (949) 474-1422
WWW.DANIELIAN.COM

© DANIELIAN ASSOCIATES EXPRESSLY RESERVES ITS COMMON LAW COPYRIGHT AND OTHER PROPERTY RIGHTS IN THESE PLANS. THESE PLANS ARE NOT TO BE REPRODUCED CHANGED OR COPIED IN ANY FORM OR MANNER WHATSOEVER, NOR ARE THEY TO BE ASSIGNED TO ANY THIRD PARTY WITHOUT FIRST OBTAINING THE EXPRESSED WRITTEN PERMISSION AND CONSENT OF DANIELIAN ASSOCIATES.

REGISTERED PROFESSIONAL ARCHITECT — ARTHUR C. DANIELIAN — No. C 4829 — STATE OF CALIFORNIA

NO.	DATE	REVISION

PROJECT TITLE
ARTISAN COLLECTION

PROJECT NO. 00052

SHEET TITLE
GENERAL NOTES

ORIGINAL DATE:
©
©
©

PRINT DATE

SHEET NO. G-4

D:\MTEC\000520\Production\0005264.dwg Mon Feb 19 10:58:44 2001

SECTION 9B — GYPSUM WALLBOARD & CEILING BOARD

1. **Scope:** Furnish and install all gypsum wallboard work complete. Verify all speciality materials, nailing and installation sequencing at sound/fire assemblies and structural shear walls prior to commencing work.

2. **Standards:**
   A. All work and materials shall meet the latest edition performance standards of the "Gypsum Association" - GA, "Recommended Specifications for the Application and Finishing of Gypsum Wallboard."
   B. All work shall comply with Chapter 25 of the U.B.C..

3. **Workmanship:**
   A. All joints in finished surfaces shall be taped and finished with joint cement. Reinforce all corners.
   B. Provide metal trim at all exposed edges and external corners.
   C. Metal trim shall be tight to wallboard edges, plumb, level, and true to plane, securely attached.
   D. Conceal exposed nail or screw heads with joint compound.
   E. Protect all exposed wood beams, post, railings etc.
   F. All gypsum wallboard at tubs/shower enclosures to be installed in such a manner that there are no surfaces out of alignment with adjacent surfaces and the true plane of the wall is maintained.

4. **Finishes:**
   A. Refer to section 10A for finish schedule.

5. **Materials:**
   A. Gypsum Wallboard and Ceiling Board: 1/2" thick throughout unless noted otherwise.
   B. Gypsum Wallboard and Ceiling Board: 5/8" thick, fire rated "X" with taped joints at fire/sound rated walls as detailed and at other walls and ceiling where noted on drawings. Provide multiple layers as detailed, with nails sized accordingly.
   C. At ceilings: Provide 5/8" gypsum wallboard when framing spacing exceeds 16" O.C..
   D. Moisture Resistant Wallboard and Ceiling Board: Use in wet areas as recommended by Gypsum Board Manufacturer.
   E. Exterior Use: Exterior grade, fire rated, gypsum sheathing, for areas subject to moisture at fire assemblies as detailed.
   F. Metal corner bead, casing and trim - galvanized and nailed.
      (1) L-shaped trim at exposed edges typical.
      (2) corner bead at external corners as selected by Owner/Client.
   G. Resilient channels: Provide at fire/sound rated floor/ceiling assemblies as detailed.
   H. Tape and Compound: As recommended by Gypsum Board Manufacturer for use specified.
   I. Nailing: Per U.B.C., also see drawings for special nailing requirements at shear walls and fire/sound rated assemblies. The Contractor, at his option, may use wallboard screws in lieu of nails as allowed by the rated assembly and local code requirement.

SECTION 9C — RESILIENT FLOORING

1. **Scope:**
   A. Furnish and install all resilient flooring material complete as scheduled.
   B. General Contractor of Owner/Client shall coordinate Flooring Subcontractor with Framing and Concrete Contractors to insure compatibility of adhesives and subfloor surface texture, materials and preparation.

2. **Installation:**
   A. Subfloors shall be clean, free of dust and perfectly dry, level and smooth.
   B. Surfaces shall be primed as recommended by the manufacturer.
   C. Materials shall be applied in accordance with the manufacturer's instructions.
   D. Coved edges at wall.

3. **Materials:**
   A. Vinyl Sheeting: As selected by Owner/Client.
   B. Adhesives: As recommended by the manufacturer of the floor covering.
   C. Refer to section 10A for finish schedule.

SECTION 9D — TILE

1. **Scope:** Furnish and install tile, grout, mastic, mortar, sealer etc. complete. Work shall be clean, plumb, level, except at areas intended to drain, true to line with consistent joints.

2. **Standards:** All work and materials shall meet the latest edition performance standards of the "Tile Council of America" - TCA.

3. **Installation:**
   A. Tile on floor, slab or wood framed shall be installed per the Tile Council of America standards.
   B. Install mud set tile at counters, tubs and showers per the Tile Council of America standards.
   C. Provide waterproof membrane beneath tile over nater resistant backing board as recommended by manufacturer and Ceramic Tile Institute and Tile Council of America standards at all areas subject to moisture and nater "i.e., tubs/showers".
   D. Provide positive slope at tile seats within showers and at floor towards floor drain.
   E. Refer to Section 10A for finish schedule.

4. **Materials:**
   A. Tile and grout as selected by Owner/Client.
   B. Refer to Section 10A for finish schedule.

SECTION 9E — PAINTING AND FINISHING

1. **Scope:** Provide painting work as indicated and specified, complete including preparation of surfaces other than those that are factory primed.

2. **Workmanship:**
   A. Each coat shall be uniformly applied, well brushed out and free of brush marks, runs, sags or skips.
   B. Paint finishes shall be cut sharply to line. Protect adjacent surfaces.
   C. Mix and apply paint and stains in accordance with the manufacturer's instructions.
   D. Hardware shall be masked or removed prior to painting or staining.
   E. Subcontractor will be responsible for any damage resulting from overspray, and for all necessary clean-up.
   F. Semi-gloss paint to be roller or brush applied.

3. **Preparation of Surfaces:**
   A. Surfaces shall be clean and dry, and in suitable condition for finish specified. Remove all oil, grease, hand breaking agents, dust, mill scale and efflorescence.
   B. Cracks, holes, and knots shall be filled, sanded smooth, and sealed. Wood surfaces, except resawn wood , shall be sanded perfectly smooth. Sanding dust shall be completely removed.
   C. Trim and other finish work shall be back-painted prior to installation, to minimize inconsistent shrinkage.

4. **Materials:**
   A. Submit list of materials and manufacturers for Owner/Client and Architects review.
   B. All materials shall be delivered to the site in sealed original manufacturer's containers.
   C. Stain shall be manufactured by "Olympic Stain" or a Owner/Client selected substitute.
   D. Paint as selected by Owner/Client.

5. **Colors:** To be selected by the Architect, refer to color schedule.

6. **Exterior Painting and Staining:**
   A. Exterior exposed concrete and masonry: Two coats masonry paint.
   B. Exterior wood, including siding, garage doors, railings, fascia, exposed beams, all trim, etc.: two coats.
   C. Exposed metal, including vent pipes, exhaust vents, heating and air conditioning units, grills, etc.: two coats of paint over one coat of primer. Color to match adjacent surfaces.
   D. All exposed edges of trim to be same color as face.
   E. No thinning of material shall be acceptable.
   F. Subcontractor shall seal all six sides of all doors.
   G. Stucco accents per Architect's color schedule.
   H. The number of coats noted above shall be considered minimum. Apply additional coats if required to provide full and even coverage throughout.
   I. Fully seal and prime all cut ends of wood members in contact with other wood members.

7. **Interior Painting and Finishing:**
   A. Ceilings and Walls:
      (1) Kitchens, nooks, bathrooms and interior service rooms: One coat sealer and one coat semi-gloss enamel, unless noted otherwise.
      (2) All other rooms: One coat sealer and one coat flat paint, unless noted otherwise.
   B. Wardrobes/Closets: Finish as specified for adjoining room, except shelving.
   C. Doors, frames, wood base, shelf cleats: One coat primer, one coat semi-gloss enamel.
   D. Stain grade cabinets: One coat sanding sealer, one coat stain, two coats lacquer.
   E. Stain grade wood hand railings, wood caps etc: One coat sanding sealer, one coat stain, two coats lacquer.
   F. Paint grade cabinets, railings, wood caps etc: One coat sealer and one coat semi-gloss enamel.
   G. Metal surfaces: Prime and paint same as adjacent surfaces.
   H. Luminous ceiling recesses are to be painted with one (1) coat sealer and one(1) coat white enamel high gloss.
   I. All exposed interior wood beams to be painted to match ceiling or solid stain per Owner/Client.
   J. Refer to Section 10A for finish schedule.
   K. The number of coats noted above shall be considered minimum. Apply additional coats if required to provide full and even coverage throughout.

SECTION 10A — BUILDER SPECIALTIES

1. **Scope:** Furnish and install complete in working order the items indicated on the drawings and as specified herein. The General Contractor to verify compatibility of all adjacent finish materials with all selected fixtures and appliances. All fixtures and appliances to be CEC Certified.

2. **Bath & Plumbing Accessories: as selected by Owner/Client.**
   A. Water Closet: 1.6 Gal. As selected by Owner/Client.
   B. Tub/Shower Combination: As selected by Owner/Client, tub/shower with tempered, shatterproof glass enclosure, minimum 72" high above drain, walls to height indicated on interior elevations, minimum 72" high above drain.
   C. Tub: As selected by Owner/Client with tempered, shatterproof glass enclosure, minimum 72" high above drain to height indicated on interior elevations.
   D. Shower Enclosure: As selected by Owner/Client. Size as indicated on drawings with tempered, shatterproof glass enclosure. Walls to height indicated on interior elevations, minimum 72" above drain. Frame as selected by Owner/Client, minimum 72" high above drain.
   E. Medicine Cabinets: Mirrored door, recess mounted, top at + 72".
   F. Water Heater: As selected by Owner/Client with pressure/temperature relief valve piped to exterior of building, with insulation blanket with pan and drain line to outside. Install on minimum 18" high stable platform at garage. Refer to Section 15A for additional installation requirements.

3. **Kitchen Fixtures and Appliances:** As selected by Owner/Client.

4. **Finish Hardware:** As selected by Owner/Client.

5. **House Numbers:** As selected by Owner/Client, visible and legible from street to meet all local code requirements.

6. **Mailboxes:** As selected by Owner/Client.

7. **Fireplaces:** As selected by Owner/Client. Elevation and size as detailed by Architect, see drawings. Prefabricated metal firebox by (Superior, I.C.B.O. ER2081) (Majestic, I.C.B.O. No. ER 4857) (Heatilator, NER 355) (Marco, I.C.B.O. No. ER 2918) (Martin, I.C.B.O. No. ER 4544) (FMI, I.C.B.O. No. ER 3507) with I.C.B.O. approved spark arrester. Spark arrester shall be of non-flammable material, 12-gauge minimum welded or woven wire mesh or cast iron plate, 3/16" minimum thickness with maximum 1" openings or other material approved by Fire Marshall which arrests burning carbon and sparks. Arrestor shall be visible for the purposes of maintenance and inspection. Decorative chimney cap shroud shall be fireplace manufacturer and I.C.B.O. approved. Installation and clearance to combustible materials, per manufacturer's requirements. Refer to MF-1 listing for energy requirements.

   OR

   Decorative Gas Appliances: Shall meet all applicable requirements for gas appliances as required by the U.M.C. Elevation and size as detailed by Architect, see drawings. Manufactured decorative gas appliance by (Superior) (Margas) (Temco) (Heatilator) (Heat-N-Glo) (Majestic) shall be U.L. approved. Clearance to combustible materials, installation and vent/flue termination shall be per manufacturer's requirements. Installation and inspection shall be by a certified gas hearth appliance specialist.

8. **Finish Schedule:**

ROOM	FLOOR MATERIAL	WALL TEXTURE	WALL PAINT	CEILING TEXTURE	CEILING PAINT
ENTRY	CT	AS	FLAT	AS	FLAT
KITCHEN	VS	SELECTED	SG	SELECTED	SG
M. BATH	CARPET	BY	SG	BY	SG
TOILET COMP.	VS	CLIENT	SG	CLIENT	SG
SEC. BATH	CARPET		SG		SG
FOYER	CARPET		FLAT		FLAT
LIVING	CARPET		FLAT		FLAT
FAM. ROOM	CARPET		FLAT		FLAT
GREAT ROOM	CARPET		FLAT		FLAT
DEN	CARPET		FLAT		FLAT
STUDY/LIB.	CARPET		FLAT		FLAT
DINING	CARPET		FLAT		FLAT
NOOK	VS		FLAT		FLAT
MORNING RM.	VS		FLAT		FLAT
HALLS	CARPET		FLAT		FLAT
M. BED	CARPET		FLAT		FLAT
SEC. BED	CARPET		FLAT		FLAT
DRESS/WARD	CARPET		FLAT		FLAT
SERVICE	VS		SG		SG
GARAGE	CONCRETE	TAPED		TAPED	

Note: Changes in floor material shall occur at the centerline of the door between adjacent rooms, unless indicated otherwise on plans.

Legend

KDT = Knock Down Texture
VS = Cushioned Vinyl Sheeting
SG = Semi-Gloss
CT = Ceramic Tile
OPT = Orange Peel Texture
SAT = Sprayed Acoustical Tile
Texture: Light (LT) Medium (M) Heavy (H)

SECTION 15A — PLUMBING

1. **Scope:**
   A. Supply all labor, transportation, materials, etc., for installation of complete plumbing system to operate according to the best practices of the trade and including but not limited to: Fixtures, hot and cold nater piping, exhaust from combustion gas piping, log lighters, drains, soil and vent piping, hot nater heaters, pipe insulation, meters, valves, vaults, etc. All materials, nork, etc., to comply with all requirements of all legally constituted public authorities having jurisdiction including all County and State ordinances. Furnish and install plumbing work complete and operable, including trenching and backfilling. Verify all material and installation requirements and limitations at fire and sound assemblies.
   B. Provide elastomeric membrane materials per details and Section 7D.
   C. Provide elastomeric membrane materials at all penetrations of the nater-resistive membrane at exterior walls.

2. **Installation:**
   A. Roughing-in shall be completed, tested and inspected as required by code before closing-in with other work.
   B. Openings in pipes, drains, and fittings shall be kept covered during construction.
   C. Provide solid backing for securing fixtures. All fixtures to be set level.
   D. Provide cleanouts at ends of all lines and where required by codes.
   E. Copper tubing shall be fully annealed to fittings.
   F. Black iron and galvanized steel pipe joints shall be made with approved pipe thread compound.
   G. Provide shut-off valves at each fixture.
   H. Provide condensate line at each F.A.U. location. Provide primary & secondary condensate line to an approved drainage receptacle at attic F.A.U. locations.
   I. Provide cold nater line to refrigerator space in recessed box or in cabinet immediately adjacent to refrigerator space.
   J. Isolate all piping from structure with fiber padding and at all penetrations with elastic caulking or sound isolators.
   K. All vents to lead to outside air, where possible, locate all roof vents to rear side or ridges. Vents to terminate a minimum of 3'-0" from windows.
   L. All horizontal A.B.S. piping shall be hung with approved hangers at 4'-0" on center minimum and spaced to permit expansion and contraction without hitting adjoining pipe. Vertical piping shall be supported at 8'-0" on center with wrought steel "U" straps securely fastened to building frame.
   M. Provide air chambers at lavatory, dishnasher and clothes nasher nater connections. Set vertically as close to fixture as possible.
   N. Provide 3/4" tee for irrigation at main shut-off.
   O. Provide water heater seismic restraints. Strapping shall be at points within the upper one-third and lower one-third of the vertical dimensions. At the lower point, a minimum distance of 4" shall be maintained above the controls with the strapping as required by the U.P.C. in seismic zones 3 and 4 only.
   P. Provide nater heater with pressure/temperature relief valve and drain line piped to the exterior of the buildings. At garage installation water heater shall be on a minimum 18" high stable platform.
   Q. Fuel burning equipment located in garages and subject to mechanical damage from the normal vehicular path shall be protected as indicated in drawings and as required by the U.M.C..
   R. No alterations to the structural frame, diaphragms, connections or shear panels shall be made which would compromise the designed structural integrity of such elements without prior nritten approval from the Structural Engineer.
   S. All penetrations of fire assemblies shall meet the requirements of the U.B.C. - Chapter 7. Provide elastomeric membrane materials at all penetrations of the nater-resistive barrier of exterior nalls.

3. **Materials:**
   A. Corrosive properties of soil: Follon all recommendations in the final Soils Report for all materials placed within or in proximity of soil as necessary.
   B. Waste and soil pipe: Service neight, cast iron no-hub at first floor of a two-story unit; A.B.S. with A.B.S. solvent all other areas.
   C. Vitrified clay pipe: First grade, salt glazed; conform with A.S.T.M. C13; outside and within 5'-0" of building.
   D. Cleanouts: Accorn or Owner/Client selected substitute.
   E. Domestic nater piping: Type "L" or "K" copper tubing belon grade and slab - verify with soil compatibility; all other copper tubing shall be Type "M". Fittings - wrought copper or cast bronze. Use no-lead solder.
   F. Dielectric isolators: Epca Type "FX", "FB" or "GX" dielectric unions.
   G. Vent piping: ABS D2661-65.
   H. Valves, stops, locks: Anti-scalding shoner and tub valves are required per U.P.C. Chicago or Owner/Client selected substitute.
   I. Roof flashing: See Section 7B.
   J. Fixtures and Fittings: See Section 10A.
   K. Provide recessed faucet box at nasher. Provide pan and drain line to outside at wood floor installations.
   L. Drains: Sized as required. Provide overflows as indicated on drawings and as necessary.
   M. Air Chambers at each end of headers, shall be 36-inches long, one pipe size larger than header. Individual chambers shall be 18 inches long, one pipe size larger than branch to fixture.
   N. Water heaters shall conform to energy regulations and shall be CEC listed.

SECTION 15A — PLUMBING (CONT.)

4. **Calculations and Drawings:** Contractor to supply and submit to the Building Department load calculations and drawings for approval prior to commencing nork. Submit 1 set to the Architect for review for conformance nith the visual design concept prior to commencing nork.

5. **Meters:** Verify all requirements with governing utility company.

SECTION 15B — FIRE SPRINKLERS (IF REQUIRED)

1. **Scope:** Supply and install complete fire sprinkler system according to the best practices of the trade.

2. **Materials and Standard:**
   A. System shall meet all requirements as required by city/county Fire Marshall and/or governing agencies.
   B. Sprinkler heads shall be concealed type with the head and cover plate finish the same as adjacent surfaces.

3. **Sprinkler Plans:** Shall be drawn and submitted to the Building Department and Fire Department for approval. Submit one (1) set of plans to Architect for review for conformance nith the visual design concept prior to commencing nork.

SECTION 15C — HEATING AND AIR CONDITIONING

1. **Scope:**
   A. Supply all labor, transportation, materials, etc., for installation of a complete heating and air conditioning system to operate according to the best practices of the trade including, but not limited to: Mechanical units, ducts, registers, canvalks, grilles, boots, vent pipes, dampers, combustion air, fans, ventilators, refrigerant lines, refrigerant, etc. All materials, nork, etc., to comply with all requirements of all legally constituted public authorities having jurisdiction including all county and state ordinances. Furnish and install all equipment complete and operable. Verify all material and installation requirements and limitations at fire and sound assemblies.
   B. Provide elastomeric membrane materials at all penetrations of the nater-resistive membrane at exterior walls.
   C. Verify that "attic" trusses provide required clearances for horizontal F.A.U.s.

2. **Installation:**
   A. Furnace to be installed in attic OR on 16" high platform at living area, OR on 18" high platform at garage as required by the U.M.C..
   B. All nork to be in conformance with acoustical requirements as noted in acoustical report.
   C. An attic furnace shall comply with Section 314 of the U.M.C. and the following:
      (1) Provide required clearances for duct nork and to combustibles.
      (2) Provide minimum 30"x30" attic access opening with fully weatherstripped door and passageway continuous to the furnace and its controls. A 22" x 30" access opening fully weatherstripped door may be used provided the largest piece of equipment can be removed through the opening.
      (3) Provide an unobstructed continuous solid floor passageway not less than 24" wide not to exceed 20' from the attic access opening to the furnace.
      (4) Provide a level working platform 30" deep in front of the entire firebox side of the furnace and to all serviceable controls, filters etc.
      (5) Provide a permanent electric outlet and switched light fixture.
   D. No alterations to the structural frame, diaphragms, connections or shear panels shall be made which would compromise the designed structural integrity of such elements without prior nritten approval from the Structural Engineer.
   E. Fuel burning equipment located in garages and subject to mechanical damage from the normal vehicular path shall be protected as indicated in drawings and as required by the U.M.C..
   F. Provide high and low combustion air in accordance with manufacturer's requirements and the U.M.C.
   G. All penetrations of fire assemblies shall meet the requirements of the U.B.C. - Chapter 7 and Section 7D.
   H. Provide elastomeric membrane materials at all penetrations of the nater-resistive membrane at exterior walls.

3. **Materials:**
   A. Ducts: Constructed, installed and insulated per Chapter 6, U.M.C..
   B. Dampers: Provide approved automatic fire dampers or minimum 26 gauge corrosion resistant metal material with sealed edges at all ductnork penetrating fire rated walls, floors or ceilings as required and allowed by the U.M.C.. All fan systems exhausting air from the building envelope to the outside shall be provided with backdraft dampers.

4. **Calculations and Drawings:** Contractor to supply and submit to the Building Department, calculations and drawings for approval. Submit 1 set to the Architect for review for conformance with the visual design concept prior to commencing nork. Equipment shall comply with state energy requirements for efficiency. Duct nork "R" value shall also comply with state energy requirements.

SECTION 16A — ELECTRICAL

1. **Scope:**
   A. Supply all labor, transportation, materials, etc., for installation of complete electrical system to operate according to the best practices of the trade and including but not limited to: Fixtures, appliances, wiring, switches, outlets, television jacks, services, grounds, temporary power, junction boxes, conduit, sub-panels, etc. All nork, materials, etc., to comply with all requirements of all legally constituted authorities having jurisdiction including all County and State ordinances. Furnish and install electrical nork complete and operable. Verify all material and installation requirements and limitations at fire and sound assemblies.
   B. Provide elastomeric membrane materials at all penetrations of the nater-resistive membrane at exterior nalls.

2. **Standards:**
   A. Electrical services: Underground.
   B. Nork and equipment shall be in accordance with the best practices of the trade and conform to all local governing agencies.
   C. Materials and equipment shall be U.L. approved.
   D. Corrosive properties of soil: Follon all recommendations in the final Soils Report for all materials placed within or in proximity of soil as necessary.
   E. Should a conflict arise between this specification, the drainings or another electrical specification issued as a part of these documents, the more stringent shall prevail.

3. **Installation:**
   A. Provide separate circuits each for dishnasher, garbage disposal, refrigerator, nasher, dryer, F.A.U. and microwave oven.
   B. Switched outlets shall be 7 hot.
   C. Bathroom and Service Room fans: Where permitted by code, switch fans separately from light. Provide exhaust fans at areas with tubs, showers and laundries with minimum five complete air changes per hour where natural ventilation does not occur. At areas with lavatories and toilets where natural ventilation does not occur, provide a recirculating fan per code requirements minimum - exhaust fan to outside air preferred. All exhaust vents to lead to outside air and be 3'-0" minimum from any opening per Section 1203.3 U.B.C..
   D. All fixtures, outlets, receptacles etc., penetrating fire assemblies shall be rated and installed to meet the requirements of the U.B.C. - Chapter 7. Outlet boxes on opposite sides of fire assembly walls shall be separated by a horizontal distance of at least 24".
   E. All equipment installed outdoors and exposed to weather shall be weatherproof.
   F. Provide ground fault circuit interrupters, G.F.C.I., at all baths, garages, outdoor and wet area outlets, as well as within 6' of kitchen sink.
   G. Provide low voltage stub-out for house numbers if local code requires illumination.
   H. Kitchen and bathroom lighting shall be in accordance with energy mandatory requirements.
   I. Each conductor of every system shall be permanently tagged in compliance with O.S.H.A.
   J. All conduit shall be installed concealed where physically possible. All exposed conduit shall be intermediate metal conduit or E.M.T. and installed parallel to or at right angles with the building nalls. If viewed by the public, paint to match surface to which it is attached.
   K. The complete electrical system shall be grounded in accordance with the presently adopted edition of the N.E.C., Art. #250.
   L. Penetrations to fire-rated materials shall be restored to equal rating as required by local enforcing agency. Flame seal as manufactured by Nelson Electric or Owner/Client selected substitute. All electrical system conductors shall be installed in approved raceways. Non-metallic, sheathed cable "Romex" is not approved for penetrations of fire rated assemblies.
   M. Use only competent and skilled personnel and perform all nork, including aesthetic as well as electrical and mechanical aspects to standards consistent with the best practices of the trade.
   N. All conduit only installations shall have a pull wire or rope.
   O. No alterations to the structural frame, diaphragms, connections or shear panels shall be made which would compromise the designed structural integrity of nithout prior such elements written approval from the Structural Engineer.
   P. Provide elastomeric membrane materials at all penetrations of the nater-resistive membrane at exterior nalls.

4. **Installation Heights:** All heights given are to bottom of fixture or outlet. Heights to meet all applicable disabled/accessibility requirements.
   A. Exterior light fixtures to be +72" from finish floor - unless noted otherwise
   B. Typical nall outlets to be +12" from finish floor
   C. Typical nall switches to be +36" from finish floor
   D. Above-counter outlets at kitchen to be +44" from finish floor
   E. Above-counter outlets at bath to be +38" from finish floor
   F. Nall outlet for range hood to be +78" from finish floor
   G. Smoke detectors located per manufacturers requirements
   H. Door chimes located within 12" of ceiling
   I. Push buttons to be +36" from finish floor
   J. Above-counter outlets at linen or other miscellaneous counters to be +44" from finish floor
   K. Outlets at service areas to be +48" from finish floor
   L. Thermostats to be at +60" from finish floor
   M. Nall outlet for microwave/range hood to be +78" from finish floor, when they occur
   N. Light bars in bathrooms to be +84" from finish floor, when they occur
   O. Step lights to be +6" above skirt board, when they occur
   P. Refer to Landscape drawings for all common area nalls and exterior lighting surrounding

SECTION 16A — ELECTRICAL (CONT.)

5. **Verify and Locate:** All outlets prior to installation of gypsum wallboard. Locate all switches and fixtures from finished floor per electrical plans and notes.

6. **Materials:**
   A. Switches: Silent type.
   B. Interior outlets: Duplex type, 15A, 125 volt.
   C. Exterior outlets: Single weatherproof type, G.F.C.I.
   D. Outlets and pull boxes: Galvanized or sheardized.
   E. Panel boxes: Circuit breaker type, recessed flush mounted, galvanized and prime coated with latch. Provide typenritten card identifying circuits.
   F. Conduit, cable, nire: Per presently adopted edition of the N.E.C.
   G. Fluorescent tubes and bulbs: Full spectrum 5500K.
   H. Recessed incandescent light fixtures: In the proximity of attic, ceiling or floor insulation shall be I.C. type zero clearance insulation cover.
   I. All materials shall be new and of the same manufacturer for each class or group of equipment. Materials shall be listed and approved by underwriter's laboratories and shall bear the inspection label where subject to such approval. Materials shall meet with the approval of the division of industrial safety and all governing bodies having jurisdiction. Materials shall be manufactured in accordance with applicable standards established by A.N.S.I., U.L., N.E.M.A. and N.B.F.U.. Install per manufacturers' recommendations.
   J. Conductors shall be code grade, 600 volt class, copper, marked 24" along it's length showing manufacturer's name, maximum allonable voltage and size. Conductors shall be type "THHN" - net. Deliver the nire to the site in unbroken packages. See Note 7.J.
   K. If aluminum feeder conductors are approved for substitution, copper only within units, and installed, final connections to vibrating equipment shall be copper only and all aluminum terminations shall be made using a "bigress" tool or other manufacturer's recommendations. Provide anti-oxide compound on all aluminum terminations. No aluminum conductor smaller than #4 AWG.
   L. Bathroom receptacle outlets shall be supplied by a minimum of a 20 ampere branch circuit. Such circuits shall have no other outlets. This circuit may serve more than one bathroom. NEC Art. 210-52
   M. All 125-volt single phase 15 and 20 ampere receptacals installed in bathroom, garage, basement, outdoors, kitchen counters and net bar sinks shall be G.I.F.I.C..

7. **House Service:** Size per requirements, Min. 100A 1" ., 3 W service.

8. **Colors and Design:**
   A. Switch plates, covers, etc.: As selected by Owner/Client.
   B. Fixtures: As selected by Owner/Client.

9. **Fire Warning System:** Smoke detectors and alarm system shall be hard-wired with battery back-up power and low battery signal and installed as required by Section 310. Detectors shall be placed in corridors, adjacent rooms and sleeping rooms - per manufacturer's recommendations. Detectors shall be placed in close proximity to stairway when bedrooms are located on upper floor. All detectors shall be interconnected to sound a simultaneous alarm audible in all sleeping areas of the dwelling unit.

10. **Meters:** Verify all requirements with governing utility company.

11. **Electrical Plans and Calculations:** Shall be drawn and submitted by the Electrical Subcontractor to the Building Department for approval. Submit one (1) set to the Architect for review for conformance with the visual design concept. Electrical Subcontractor shall coordinate his drawings with the Architects.

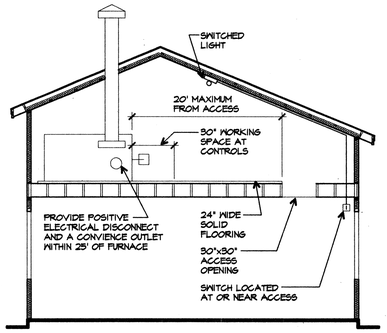

ATTIC FURNACE
NTS

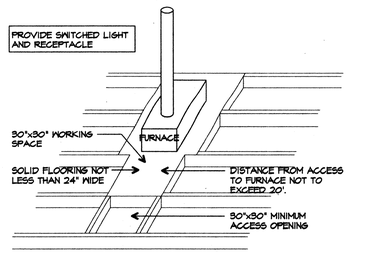

AXO FURNACE
NTS

DANIELIAN ASSOCIATES
ARCHITECTURE & PLANNING
SIXTY CORPORATE PARK
IRVINE, CALIFORNIA 92606
(949) 474-6030
FAX: (949) 474-1422
WWW.DANIELIAN.COM

© DANIELIAN ASSOCIATES EXPRESSLY RESERVES ITS COMMON LAW COPYRIGHT AND OTHER PROPERTY RIGHTS IN THESE PLANS. THESE PLANS ARE NOT TO BE REPRODUCED CHANGED OR COPIED IN ANY FORM OR MANNER WHATSOEVER. NOR ARE THEY TO BE ASSIGNED TO ANY THIRD PARTY WITHOUT FIRST OBTAINING THE EXPRESSED WRITTEN PERMISSION AND CONSENT OF DANIELIAN ASSOCIATES.

ARTHUR C. DANIELIAN
No. C 4829
REGISTERED PROFESSIONAL ARCHITECT
STATE OF CALIFORNIA

NO.	DATE	REVISION

PROJECT TITLE
ARTISAN COLLECTION

PROJECT NO. 00052

SHEET TITLE
GENERAL NOTES

ORIGINAL DATE:

PRINT DATE

SHEET NO. G-5

D:\MTEC\00052\Production\0005205.dwg Mon Feb 19 10:58:52 2001

CERTIFICATE OF COMPLIANCE: RESIDENTIAL — Page 1 — CF-1R

```
Project Title.......... FORD-DAVALL GRP ARTISAN         Date..02/03/01 12:13:00
Project Address........ ARTISAN COLLECTION               *******
                        CATHEDRAL CITY, CA               *v5.10*
Documentation Author... CATHERINE M. MADLIN              *******   Building Permit #
                        Madlin's Enterprises
                        P.O. Box 1443                              Plan Check / Date
                        Palm Springs, CA  92262
                        760-322-5004                               Field Check/ Date
Climate Zone........... 15
Compliance Method...... MICROPAS5 v5.10 for 1998 Standards by Enercomp, Inc.

MICROPAS5 v5.10  File-19785A2  Wth-CTZ15S92  Program-FORM CF-1R
User#-MP0207  User-Madlin's Enterprises  Run-PLAN 2 w/ CASITA
```

GENERAL INFORMATION

```
Conditioned Floor Area.....  2643 sf
Building Type..............  Single Family Detached
Construction Type .........  New
Building Front Orientation.  Cardinal - N,E,S,W
Number of Dwelling Units...  1
Number of Stories..........  1
Floor Construction Type....  Slab On Grade
Glazing Percentage.........  17 % of floor area
Average Glazing U-value....  0.75 Btu/hr-sf-F
Average Glazing SHGC.......  0.7
Average Ceiling Height.....  10.5 ft
```

BUILDING SHELL INSULATION

Component Type	Frame Type	Cavity R-value	Sheathing R-value	Total R-value	Assembly U-value	Location/Comments
Wall	Wood	R-13	R-3.41	R-16.41	0.065	
Wall	Wood	R-13	R-0	R-13	0.088	
Door	None	R-0	R-0	R-0	0.330	
Roof	Wood	R-11	R-27	R-38	0.025	
SlabEdge	None	R-0	R-0		F2=0.760	
SlabEdge	None	R-0	R-0		F2=0.510	

FENESTRATION

Orientation			Area (sf)	U-Value	SHGC	Interior Shading	Exterior Shading	Over-hang/ Fins
Window	Left	(E)	1.0	0.610	0.730	Standard	Standard	None
Window	Left	(E)	1.0	0.610	0.730	Standard	Standard	None
Window	Left	(E)	1.0	0.610	0.730	Standard	Standard	None
Window	Left	(E)	1.0	0.610	0.730	Standard	Standard	None
Window	Left	(E)	30.0	0.750	0.700	Blind	Standard	None
Door	Back	(S)	64.0	0.770	0.700	Blind	Standard	Yes
Window	Back	(S)	30.0	0.750	0.700	Blind	Standard	Yes
Window	Back	(S)	30.0	0.750	0.700	Blind	Standard	Yes
Window	Back	(S)	25.0	0.750	0.700	Blind	Standard	Yes
Door	Left	(E)	21.4	0.770	0.700	Blind	Standard	Yes
Window	Back	(S)	30.0	0.750	0.700	Blind	Standard	None
Window	Back	(S)	30.0	0.750	0.700	Blind	Standard	None
Window	Right	(W)	15.0	0.750	0.700	Blind	Standard	None
Window	Right	(W)	15.0	0.750	0.700	Blind	Standard	None

CERTIFICATE OF COMPLIANCE: RESIDENTIAL — Page 2 — CF-1R

```
Project Title.......... FORD-DAVALL GRP ARTISAN         Date..02/03/01 12:13:00
MICROPAS5 v5.10  File-19785A2  Wth-CTZ15S92  Program-FORM CF-1R
User#-MP0207  User-Madlin's Enterprises  Run-PLAN 2 w/ CASITA
```

FENESTRATION

Orientation			Area (sf)	U-Value	SHGC	Interior Shading	Exterior Shading	Over-hang/ Fins
Window	Right	(W)	25.0	0.750	0.700	Blind	Standard	None
Window	Right	(W)	8.0	0.750	0.700	Blind	Standard	None
Door	Front	(N)	40.0	0.770	0.700	Blind	Standard	None
Window	Front	(N)	7.5	0.610	0.730	Standard	Standard	Yes
Window	Front	(N)	1.0	0.610	0.730	Standard	Standard	None
Window	Front	(N)	1.0	0.610	0.730	Standard	Standard	None
Window	Front	(N)	1.0	0.610	0.730	Blind	Standard	None
Window	Left	(E)	8.0	0.750	0.700	Blind	Standard	None
Window	Back	(S)	30.0	0.750	0.700	Blind	Standard	None
Window	Right	(W)	4.0	0.610	0.730	Blind	Standard	None
Window	Right	(W)	4.0	0.610	0.730	Blind	Standard	None
Window	Right	(W)	4.0	0.610	0.730	Blind	Standard	None
Window	Front	(N)	15.0	0.750	0.700	Blind	Standard	None
Window	Front	(N)	6.0	0.750	0.700	Blind	Standard	None

SLAB SURFACES

Slab Type	Area (sf)
Standard Slab	2389
Standard Slab	254

HVAC SYSTEMS

Equipment Type	Minimum Efficiency	Duct Location	Duct R-value	Tested Duct Leakage	ACCA Manual D	Thermostat Type
Furnace	0.780 AFUE	Attic	R-4.2	No	No	Setback
ACSplit	11.00 SEER	Attic	R-4.2	No	No	Setback
Furnace	0.780 AFUE	Attic	R-4.2	No	No	Setback
ACSplit	11.00 SEER	Attic	R-4.2	No	No	Setback

WATER HEATING SYSTEMS

Tank Type	Heater Type	Distribution Type	Number in System	Energy Factor	Tank Size (gal)	External Insulation R-value
DHW1						
Storage	Gas	Recirc/TimeTemp	1	0.58	50	R- n/a
DHW2						
Storage	Gas	Standard	1	0.58	40	R- n/a

CERTIFICATE OF COMPLIANCE: RESIDENTIAL — Page 3 — CF-1R

```
Project Title.......... FORD-DAVALL GRP ARTISAN         Date..02/03/01 12:13:00
MICROPAS5 v5.10  File-19785A2  Wth-CTZ15S92  Program-FORM CF-1R
User#-MP0207  User-Madlin's Enterprises  Run-PLAN 2 w/ CASITA
```

SPECIAL FEATURES AND MODELING ASSUMPTIONS

*** Items in this section should be documented on the plans, ***
*** installed to manufacturer and CEC specifications, and ***
*** verified during plan check and field inspection. ***

This is a multiple orientation building with no orientation restrictions. This printout is for the front facing North.

This building incorporates non-standard Water Heating System

REMARKS

This plan has glazing options for different elevations. The largest glazing options have been used for the purpose of demonstrating compliance with Title 24.

The DHW recirculating system is a buyer option and may not be installed in every home.

The values and materials used in this compliance portfolio are the minimum required to show compliance with Title 24 Energy Conservation Standards. The owner may (at his/her option) install better materials without additional compliance calculations.

The installing hvac contractor shall provide the required CF-6R with the installed hvac equipment model numbers.

A night setback thermostat is required to be installed with the HVAC system.

The installed plumber shall provide the required CF-6R listing the water heater model number(s) and certified plumbing fixtures.

CERTIFICATE OF COMPLIANCE: RESIDENTIAL — Page 4 — CF-1R

```
Project Title.......... FORD-DAVALL GRP ARTISAN         Date..02/03/01 12:13:00
MICROPAS5 v5.10  File-19785A2  Wth-CTZ15S92  Program-FORM CF-1R
User#-MP0207  User-Madlin's Enterprises  Run-PLAN 2 w/ CASITA
```

COMPLIANCE STATEMENT

This certificate of compliance lists the building features and performance specifications needed to comply with Title-24, Parts 1 and 6 of the California Code of Regulations, and the administrative regulations to implement them. This certificate has been signed by the individual with overall design responsibility. When this certificate of compliance is submitted for a single building plan to be built in multiple orientations, any shading feature that is varied is indicated in the Special Features Modeling Assumptions section.

```
DESIGNER or OWNER                       DOCUMENTATION AUTHOR

Name.... MARIO GONZALES                 Name.... CATHERINE M. MADLIN
Company. FORD-DaVALL GROUP, LLC.        Company. Madlin's Enterprises
Address. 68936 ADELENA ROAD             Address. P.O. Box 1443
         CATHEDRAL CITY, CA                      Palm Springs, CA  92262
Phone... 760-322-3422                   Phone... 760-322-5004
License. ____________

Signed.. ____________ (date)            Signed.. [signature] (date) 2-3-01

ENFORCEMENT AGENCY

Name.... ____________
Title... ____________
Agency.. ____________
Phone... ____________
Signed.. ____________ (date)
```

Certified Energy Analyst
Catherine M. Madlin
NR 98-90-544
R 98-90-144
CABEC
California Association of Building Energy Consultants

CERTIFICATE OF COMPLIANCE: RESIDENTIAL — Page 1 — CF-1R

```
Project Title.......... FORD-DAVALL GRP ARTISAN         Date..02/03/01 12:16:26
Project Address........ ARTISAN COLLECTION               *******
                        CATHEDRAL CITY, CA               *v5.10*
Documentation Author... CATHERINE M. MADLIN              *******   Building Permit #
                        Madlin's Enterprises
                        P.O. Box 1443                              Plan Check / Date
                        Palm Springs, CA  92262
                        760-322-5004                               Field Check/ Date
Climate Zone........... 15
Compliance Method...... MICROPAS5 v5.10 for 1998 Standards by Enercomp, Inc.

MICROPAS5 v5.10  File-19780A1  Wth-CTZ15S92  Program-FORM CF-1R
User#-MP0207  User-Madlin's Enterprises  Run-PLAN 1 ARTISAN
```

GENERAL INFORMATION

```
Conditioned Floor Area.....  2125 sf
Building Type..............  Single Family Detached
Construction Type .........  New
Building Front Orientation.  Cardinal - N,E,S,W
Number of Dwelling Units...  1
Number of Stories..........  1
Floor Construction Type....  Slab On Grade
Glazing Percentage.........  17.6 % of floor area
Average Glazing U-value....  0.75 Btu/hr-sf-F
Average Glazing SHGC.......  0.7
Average Ceiling Height.....  10 ft
```

BUILDING SHELL INSULATION

Component Type	Frame Type	Cavity R-value	Sheathing R-value	Total R-value	Assembly U-value	Location/Comments
Wall	Wood	R-13	R-3.41	R-16.41	0.065	
Wall	Wood	R-13	R-0	R-13	0.088	
Door	None	R-0	R-0	R-0	0.330	
Roof	Wood	R-11	R-27	R-38	0.025	
SlabEdge	None	R-0	R-0		F2=0.760	
SlabEdge	None	R-0	R-0		F2=0.510	

FENESTRATION

Orientation			Area (sf)	U-Value	SHGC	Interior Shading	Exterior Shading	Over-hang/ Fins
Window	Left	(E)	15.0	0.750	0.700	Blind	Standard	None
Window	Left	(E)	4.0	0.610	0.730	Blind	Standard	None
Window	Left	(E)	4.0	0.610	0.730	Blind	Standard	None
Window	Back	(S)	27.0	0.750	0.700	Blind	Standard	Yes
Window	Back	(S)	27.0	0.750	0.700	Blind	Standard	Yes
Window	Left	(SE)	12.0	0.750	0.700	Blind	Standard	Yes
Door	Back	(S)	64.0	0.770	0.700	Blind	Standard	Yes
Window	Back	(SW)	12.0	0.750	0.700	Blind	Standard	Yes
Window	Back	(S)	22.5	0.750	0.700	Blind	Standard	Yes
Door	Left	(E)	20.0	0.770	0.700	Blind	Standard	Yes
Window	Back	(S)	25.0	0.750	0.700	Blind	Standard	None
Window	Back	(S)	25.0	0.750	0.700	Blind	Standard	None
Window	Right	(W)	15.0	0.750	0.700	Blind	Standard	None
Window	Right	(W)	20.0	0.750	0.700	Blind	Standard	None

CERTIFICATE OF COMPLIANCE: RESIDENTIAL — Page 2 — CF-1R

```
Project Title.......... FORD-DAVALL GRP ARTISAN         Date..02/03/01 12:16:26
MICROPAS5 v5.10  File-19780A1  Wth-CTZ15S92  Program-FORM CF-1R
User#-MP0207  User-Madlin's Enterprises  Run-PLAN 1 ARTISAN
```

FENESTRATION

Orientation			Area (sf)	U-Value	SHGC	Interior Shading	Exterior Shading	Over-hang/ Fins
Window	Right	(W)	8.0	0.750	0.700	Blind	Standard	None
Window	Front	(N)	25.0	0.750	0.700	Blind	Standard	None
Door	Right	(W)	20.0	0.770	0.700	Blind	Standard	Yes
Window	Front	(N)	25.0	0.750	0.700	Blind	Standard	None
Window	Front	(N)	4.5	0.610	0.730	Standard	Standard	None

SLAB SURFACES

Slab Type	Area (sf)
Standard Slab	2125

HVAC SYSTEMS

Equipment Type	Minimum Efficiency	Duct Location	Duct R-value	Tested Duct Leakage	ACCA Manual D	Thermostat Type
Furnace	0.780 AFUE	Attic	R-4.2	No	No	Setback
ACSplit	11.00 SEER	Attic	R-4.2	No	No	Setback

WATER HEATING SYSTEMS

Tank Type	Heater Type	Distribution Type	Number in System	Energy Factor	Tank Size (gal)	External Insulation R-value
Storage	Gas	Recirc/TimeTemp	1	0.58	50	R- n/a

SPECIAL FEATURES AND MODELING ASSUMPTIONS

*** Items in this section should be documented on the plans, ***
*** installed to manufacturer and CEC specifications, and ***
*** verified during plan check and field inspection. ***

This is a multiple orientation building with no orientation restrictions. This printout is for the front facing North.

REMARKS

This plan has glazing options for different elevations. The largest glazing options have been used for the purpose of demonstrating compliance with Title 24.

The DHW recirculating system is a buyer option and may not be installed in every home.

The values and materials used in this compliance portfolio are the minimum required to show compliance with Title 24 Energy

CERTIFICATE OF COMPLIANCE: RESIDENTIAL — Page 3 — CF-1R

```
Project Title.......... FORD-DAVALL GRP ARTISAN         Date..02/03/01 12:1?:26
MICROPAS5 v5.10  File-19780A1  Wth-CTZ15S92  Program-FORM CF-1R
User#-MP0207  User-Madlin's Enterprises  Run-PLAN 1 ARTISAN
```

REMARKS

Conservation Standards. The owner may (at his/her option) install better materials without additional compliance calculations.

The installing hvac contractor shall provide the required CF-6R with the installed hvac equipment model numbers.

A night setback thermostat is required to be installed with the HVAC system.

The installed plumber shall provide the required CF-6R listing the water heater model number(s) and certified plumbing fixtures.

CERTIFICATE OF COMPLIANCE: RESIDENTIAL — Page 4 — CF-1R

```
Project Title.......... FORD-DAVALL GRP ARTISAN         Date..02/03/01 12:16:26
MICROPAS5 v5.10  File-19780A1  Wth-CTZ15S92  Program-FORM CF-1R
User#-MP0207  User-Madlin's Enterprises  Run-PLAN 1 ARTISAN
```

COMPLIANCE STATEMENT

This certificate of compliance lists the building features and performance specifications needed to comply with Title-24, Parts 1 and 6 of the California Code of Regulations, and the administrative regulations to implement them. This certificate has been signed by the individual with overall design responsibility. When this certificate of compliance is submitted for a single building plan to be built in multiple orientations, any shading feature that is varied is indicated in the Special Features Modeling Assumptions section.

```
DESIGNER or OWNER                       DOCUMENTATION AUTHOR

Name.... MARIO GONZALES                 Name.... CATHERINE M. MADLIN
Company. FORD-DaVALL GROUP, LLC.        Company. Madlin's Enterprises
Address. 68936 ADELENA ROAD             Address. P.O. Box 1443
         CATHEDRAL CITY, CA                      Palm Springs, CA  92262
Phone... 760-322-3422                   Phone... 760-322-5004
License. ____________

Signed.. ____________ (date)            Signed.. [signature] (date) 2-3-01

ENFORCEMENT AGENCY

Name.... ____________
Title... ____________
Agency.. ____________
Phone... ____________
Signed.. ____________ (date)
```

Certified Energy Analyst
Catherine M. Madlin
NR 98-90-544
R 98-90-144
CABEC
California Association of Building Energy Consultants

MANDATORY MEASURES CHECKLIST: RESIDENTIAL (Page 1 of 2) MF-1R

Note: Lowrise residential buildings subject to the Standards must contain these measures regardless of the compliance approach used. Items marked with an asterisk (*) may be superseded by more stringent compliance requirements listed on the Certificate of Compliance. When this checklist is incorporated into the permit documents, the features noted shall be considered by all parties as minimum component performance specifications for the mandatory measures whether they are shown elsewhere in the documents or on this checklist only.

Instructions: Check or initial applicable boxes when completed or enter N/A if not applicable.

DESCRIPTION	DESIGNER	ENFORCEMENT
Building Envelope Measures:		
* §150(a): Minimum R-19 ceiling insulation.	✓	
§150(b): Loose fill insulation manufacturer's labeled R-Value.		
* §150(c): Minimum R-13 wall insulation in wood framed walls or equivalent U-value in metal frame walls (does not apply to exterior mass walls).	✓	
* §150(d): Minimum R-13 raised floor insulation in framed floors.		
§150(l): Slab edge insulation - water absorption rate no greater than 0.3%, water vapor transmission rate no greater than 2.0 perm/inch.		
§118: Insulation specified or installed meets insulation quality standards. Indicate type and form.	✓	
§116-17: Fenestration Products, Exterior Doors, and Infiltration/Exfiltration Controls 1. Doors and windows between conditioned and unconditioned spaces designed to limit air leakage. 2. Fenestration products (except field-fabricated) have label with certified U-value, certified Solar Heat Gain Coefficient (SHGC), and infiltration certification. 3. Exterior doors and windows weatherstripped; all joints and penetrations caulked and sealed.	✓	
§150(g): Vapor barriers mandatory in Climate Zones 14 and 16 only.		
§150(f): Special infiltration barrier installed to comply with § 151 meets Commission quality standards.		
§150(e): Installation of Fireplaces, Decorative Gas Appliances and Gas Logs. 1. Masonry and factory-built fireplaces have: a. Closeable metal or glass door b. Outside air intake with damper and control c. Flue damper and control 2. No continuous burning gas pilot lights allowed.	✓	
Space Conditioning, Water Heating and Plumbing System Measures:		
§110-§113: HVAC equipment, water heaters, showerheads and faucets certified by the Commission.	✓	
§150(h): Heating and/or cooling loads calculated in accordance with ASHRAE, SMACNA or ACCA.	✓	
§150(i): Setback thermostat on all applicable heating and/or cooling systems.	✓	
§150(j): Pipe and tank insulation 1. Storage gas water heaters rated with an Energy Factor less than 0.58 must be externally wrapped with insulation having an installed thermal resistance of R-12 or greater. 2. First 5 feet of pipes closest to water heater tank, non-recirculating systems, insulated (R-4 or greater) 3. Back-up tanks for solar system, unfired storage tanks, or other indirect hot water tanks have R-12 external insulation or R-16 combined internal/external insulation. 4. All buried or exposed piping insulated in recirculating sections of hot water systems. 5. Cooling system piping below 55° F insulated. 6. Piping insulated between heating source and indirect hot water tank.	✓	

July 1, 1999

MANDATORY MEASURES CHECKLIST: RESIDENTIAL (Page 2 of 2) MF-1R

Note: Lowrise residential buildings subject to the Standards must contain these measures regardless of the compliance approach used. Items marked with an asterisk (*) may be superseded by more stringent compliance requirements listed on the Certificate of Compliance. When this checklist is incorporated into the permit documents, the features noted shall be considered by all parties as minimum component performance specifications for the mandatory measures whether they are shown elsewhere in the documents or on this checklist only.

Instructions: Check or initial applicable boxes when completed or enter N/A if not applicable.

DESCRIPTION	DESIGNER	ENFORCEMENT
Space Conditioning, Water Heating and Plumbing System Measures: (continued)		
* §150(m): Ducts and Fans 1. All ducts and plenums constructed, installed, insulated, fastened, and sealed to comply with the ICBO 1997 UMC sections 601 and 603; ducts insulated to a minimum installed R-4.2 or ducts enclosed entirely within conditioned space. Openings shall be sealed with mastic, tape, aerosol sealant or other duct closure system that meets the applicable requirements of UL181, UL181A, or UL181B and other applicable specified tests for longevity given in §150(m). 2. Exhaust fan systems have back draft or automatic dampers. 3. Gravity ventilating systems serving conditioned space have either automatic or readily accessible, manually operated dampers.	✓	
§114: Pool and Spa Heating Systems and Equipment 1. System is certified with 78% thermal efficiency, on-off switch, weatherproof operating instructions, no electric resistance heating and no pilot light. 2. System is installed with: a. At least 36" of pipe between filter and heater for future solar heating. b. Cover for outdoor pools or outdoor spas. 3. Pool system has directional inlets and a circulation pump time switch.	✓	
§115: Gas fired central furnaces, pool heaters, spa heaters or household cooking appliances have no continuously burning pilot light. (Exception: Non-electrical cooking appliances with pilot < 150 Btu/hr)	✓	
Lighting Measures:		
§150(k)1.: Luminaires for general lighting in kitchens shall have lamps with an efficacy of 40 lumens/watt or greater for general lighting in kitchens. This general lighting shall be controlled by a switch on a readily accessible lighting control panel at an entrance to the kitchen.	✓	
§150(k)2.: Rooms with a shower or bathtub must either have at least one luminaire with lamps with an efficacy of 40 lumens/watt or greater switched at the entrance to the room or one of the alternatives to this requirement allowed in §150(k)2.; and recessed ceiling fixtures are IC (insulation cover) approved.	✓	

July 1, 1999

REGISTERED PROFESSIONAL ARCHITECT
ARTHUR C. DANIELIAN
Reg. No. C 4829
STATE OF CALIFORNIA

NO.	DATE	REVISION

PROJECT TITLE
ARTISAN COLLECTION

PROJECT NO. 00052

SHEET TITLE
T-24
CERTIFICATE OF COMPLIANCE

ORIGINAL DATE:
©
©
©
©

PRINT DATE

SHEET NO. **G-6**

D:\MTEC\00052\Temp\T-24.dwg Thu Feb 08 15:11:09 2001

Project Title..... FORD-DAVALL GRP ARTISAN Date..02/03/01 11:24:16
Project Address... ARTISAN COLLECTION *******
CATHEDRAL CITY, CA *v5.10+
Documentation Author... CATHERINE M. MADLIN *******
Madlin's Enterprises
P.O. Box 1443
Palm Springs, CA 92262
760-322-5004
Climate Zone..... 15
Compliance Method..... MICROPAS5 v5.10 for 1998 Standards by Enercomp, Inc.

Building Permit #
Plan Check / Date
Field Check/ Date

MICROPAS5 v5.10 File-19795A1 Wth-CTZ15S92 Program-FORM CF-1R
User#-MP0207 User-Madlin's Enterprises Run-PLAN 4 PERMIT CALC

GENERAL INFORMATION

Conditioned Floor Area..... 3137 sf
Building Type..... Single Family Detached
Construction Type..... New
Building Front Orientation. Cardinal - N,E,S,W
Number of Dwelling Units.. 1
Number of Stories..... 1
Floor Construction Type.... Slab On Grade
Glazing Percentage..... 19.6 % of floor area
Average Glazing U-value.... 0.73 Btu/hr-sf-F
Average Glazing SHGC..... 0.7
Average Ceiling Height..... 10.5 ft

BUILDING SHELL INSULATION

Component Type	Frame Type	Cavity R-value	Sheathing R-value	Total R-value	Assembly U-value	Location/Comments
Wall	Wood	R-13	R-3.41	R-16.41	0.065	
Wall	Wood	R-13	R-0	R-13	0.088	
Door	None	R-0	R-0	R-0	0.330	
Roof	Wood	R-11	R-27	R-38	0.025	
SlabEdge	None	R-0	R-0		F2=0.760	
SlabEdge	None	R-0	R-0		F2=0.510	

FENESTRATION

Orientation		Area (sf)	U-Value	SHGC	Interior Shading	Exterior Shading	Over-hang/ Fins
Window	Left (E)	8.0	0.750	0.700	Blind	Standard	None
Window	Left (E)	25.0	0.750	0.700	Blind	Standard	None
Window	Left (E)	30.0	0.750	0.700	Blind	Standard	None
Window	Left (E)	1.0	0.610	0.730	Standard	Standard	None
Window	Left (E)	1.0	0.610	0.730	Standard	Standard	None
Window	Left (E)	1.0	0.610	0.730	Standard	Standard	None
Window	Left (E)	1.0	0.610	0.730	Standard	Standard	None
Window	Left (E)	20.0	0.750	0.700	Blind	Standard	None
Window	Back (S)	30.0	0.750	0.700	Blind	Standard	Yes
Window	Back (S)	30.0	0.750	0.700	Blind	Standard	Yes
Door	Back (SW)	17.8	0.770	0.700	Blind	Standard	Yes
Window	Back (S)	24.0	0.750	0.700	Blind	Standard	Yes
Window	Back (S)	30.0	0.610	0.730	Blind	Standard	Yes
Window	Back (S)	24.0	0.750	0.700	Blind	Standard	Yes

Project Title..... FORD-DAVALL GRP ARTISAN Date..02/03/01 11:24:16

MICROPAS5 v5.10 File-19795A1 Wth-CTZ15S92 Program-FORM CF-1R
User#-MP0207 User-Madlin's Enterprises Run-PLAN 4 PERMIT CALC

SPECIAL FEATURES AND MODELING ASSUMPTIONS

*** Items in this section should be documented on the plans, ***
*** installed to manufacturer and CEC specifications, and ***
*** verified during plan check and field inspection. ***

This is a multiple orientation building with no orientation restrictions.
This printout is for the front facing North.

REMARKS

This plan has glazing options for different elevations. The largest glazing options have been used for the purpose of demonstrating compliance with Title 24.

The DHW recirculating system is a buyer option and may not be installed in every home.

The values and materials used in this compliance portfolio are the minimum required to show compliance with Title 24 Energy Conservation Standards. The owner may (at his/her option) install better materials without additional compliance calculations.

The installing hvac contractor shall provide the required CF-6R with the installed hvac equipment model numbers.

A night setback thermostat is required to be installed with the HVAC system.

The installed plumber shall provide the required CF-6R listing the water heater model number(s) and certified plumbing fixtures.

Project Title..... FORD-DAVALL GRP ARTISAN Date..02/03/01 11:27:03
Project Address... ARTISAN COLLECTION *******
CATHEDRAL CITY, CA *v5.10+
Documentation Author... CATHERINE M. MADLIN *******
Madlin's Enterprises
P.O. Box 1443
Palm Springs, CA 92262
760-322-5004
Climate Zone..... 15
Compliance Method..... MICROPAS5 v5.10 for 1998 Standards by Enercomp, Inc.

Building Permit #
Plan Check / Date
Field Check/ Date

MICROPAS5 v5.10 File-19796A2G Wth-CTZ15S92 Program-FORM CF-1R
User#-MP0207 User-Madlin's Enterprises Run-PLAN 4 w/ GUEST SUITE

GENERAL INFORMATION

Conditioned Floor Area..... 3372 sf
Building Type..... Single Family Detached
Construction Type..... New
Building Front Orientation. Cardinal - N,E,S,W
Number of Dwelling Units.. 1
Number of Stories..... 1
Floor Construction Type.... Slab On Grade
Glazing Percentage..... 21.1 % of floor area
Average Glazing U-value.... 0.73 Btu/hr-sf-F
Average Glazing SHGC..... 0.7
Average Ceiling Height..... 10.5 ft

BUILDING SHELL INSULATION

Component Type	Frame Type	Cavity R-value	Sheathing R-value	Total R-value	Assembly U-value	Location/Comments
Wall	Wood	R-13	R-3.41	R-16.41	0.065	
Wall	Wood	R-13	R-0	R-13	0.088	
Door	None	R-0	R-0	R-0	0.330	
Roof	Wood	R-11	R-27	R-38	0.025	
SlabEdge	None	R-0	R-0		F2=0.760	
SlabEdge	None	R-0	R-0		F2=0.510	

FENESTRATION

Orientation		Area (sf)	U-Value	SHGC	Interior Shading	Exterior Shading	Over-hang/ Fins
Window	Left (E)	8.0	0.750	0.700	Blind	Standard	None
Window	Left (E)	30.0	0.750	0.700	Blind	Standard	None
Window	Left (E)	30.0	0.750	0.700	Blind	Standard	None
Window	Left (E)	1.0	0.610	0.730	Standard	Standard	None
Window	Left (E)	1.0	0.610	0.730	Standard	Standard	None
Window	Left (E)	1.0	0.610	0.730	Standard	Standard	None
Window	Left (E)	20.0	0.750	0.700	Blind	Standard	None
Window	Back (S)	30.0	0.750	0.700	Blind	Standard	Yes
Window	Back (S)	30.0	0.750	0.700	Blind	Standard	Yes
Door	Back (SW)	17.8	0.770	0.700	Blind	Standard	Yes
Window	Back (S)	24.0	0.750	0.700	Blind	Standard	Yes
Window	Back (S)	30.0	0.610	0.730	Blind	Standard	Yes
Window	Back (S)	24.0	0.750	0.700	Blind	Standard	Yes

Project Title..... FORD-DAVALL GRP ARTISAN Date..02/03/01 11:27:03

MICROPAS5 v5.10 File-19796A2G Wth-CTZ15S92 Program-FORM CF-1R
User#-MP0207 User-Madlin's Enterprises Run-PLAN 4 w/ GUEST SUITE

WATER HEATING SYSTEMS

Tank Type	Heater Type	Distribution Type	Number in System	Energy Factor	Tank Size (gal)	External Insulation R-value
Storage	Gas	Recirc/TimeTemp	1	0.58	50	R- n/a

SPECIAL FEATURES AND MODELING ASSUMPTIONS

*** Items in this section should be documented on the plans, ***
*** installed to manufacturer and CEC specifications, and ***
*** verified during plan check and field inspection. ***

This is a multiple orientation building with no orientation restrictions.
This printout is for the front facing North.

REMARKS

This plan has glazing options for different elevations. The largest glazing options have been used for the purpose of demonstrating compliance with Title 24.

The DHW recirculating system is a buyer option and may not be installed in every home.

The values and materials used in this compliance portfolio are the minimum required to show compliance with Title 24 Energy Conservation Standards. The owner may (at his/her option) install better materials without additional compliance calculations.

The installing hvac contractor shall provide the required CF-6R with the installed hvac equipment model numbers.

A night setback thermostat is required to be installed with the HVAC system.

The installed plumber shall provide the required CF-6R listing the water heater model number(s) and certified plumbing fixtures.

Project Title..... FORD-DAVALL GRP ARTISAN Date..02/03/01 11:24:16

MICROPAS5 v5.10 File-19795A1 Wth-CTZ15S92 Program-FORM CF-1R
User#-MP0207 User-Madlin's Enterprises Run-PLAN 4 PERMIT CALC

FENESTRATION

Orientation		Area (sf)	U-Value	SHGC	Interior Shading	Exterior Shading	Over-hang/ Fins
Door	Left (E)	21.4	0.770	0.700	Blind	Standard	Yes
Window	Back (S)	30.0	0.750	0.700	Blind	Standard	None
Window	Back (S)	36.0	0.750	0.700	Blind	Standard	None
Window	Back (S)	4.0	0.610	0.730	Blind	Standard	None
Window	Back (S)	25.0	0.750	0.700	Blind	Standard	None
Window	Right (W)	25.0	0.750	0.700	Blind	Standard	None
Window	Right (W)	4.0	0.610	0.730	Blind	Standard	None
Window	Right (W)	4.0	0.610	0.730	Blind	Standard	None
Window	Right (W)	10.0	0.750	0.700	Blind	Standard	None
Window	Back (E)	12.5	0.750	0.700	Blind	Standard	None
Door	Back (E)	24.0	0.770	0.700	Blind	Standard	None
Window	Back (E)	20.0	0.750	0.700	Blind	Standard	None
Window	Left (E)	4.0	0.610	0.730	Blind	Standard	None
Window	Left (E)	4.0	0.610	0.730	Blind	Standard	None
Window	Front (N)	15.0	0.750	0.700	Blind	Standard	None
Door	Front (N)	24.0	0.770	0.700	Blind	Standard	None
Window	Front (N)	15.0	0.750	0.700	Blind	Standard	None
Window	Front (N)	13.8	0.610	0.730	Standard	Standard	Yes
Window	Right (W)	45.0	0.750	0.700	Blind	Standard	None
Window	Right (W)	25.0	0.750	0.700	Blind	Standard	None
Window	Front (N)	25.0	0.750	0.700	Blind	Standard	None

Project Title..... FORD-DAVALL GRP ARTISAN Date..02/03/01 11:24:16

MICROPAS5 v5.10 File-19795A1 Wth-CTZ15S92 Program-FORM CF-1R
User#-MP0207 User-Madlin's Enterprises Run-PLAN 4 PERMIT CALC

COMPLIANCE STATEMENT

This certificate of compliance lists the building features and performance specifications needed to comply with Title-24, Parts 1 and 6 of the California Code of Regulations, and the administrative regulations to implement them. This certificate has been signed by the individual with overall design responsibility. When this certificate of compliance is submitted for a single building plan to be built in multiple orientations, any shading feature that is varied is indicated in the Special Features Modeling Assumptions section.

DESIGNER or OWNER

Name.... MARIO GONZALES
Company. FORD-DaVALL GROUP, LLC.
Address. 68936 ADELENA ROAD
CATHEDRAL CITY, CA
Phone... 760-322-3422
License. _____
Signed.. _____ (date)

DOCUMENTATION AUTHOR

Name.... CATHERINE M. MADLIN
Company. Madlin's Enterprises
Address. P.O. Box 1443
Palm Springs, CA 92262
Phone... 760-322-5004
Signed.. Catherine M. Madlin (date) 2-3-01

ENFORCEMENT AGENCY

Name.... _____
Title... _____
Agency.. _____
Phone... _____
Signed.. _____ (date)

Certified Energy Analyst
Catherine M. Madlin
NR 99-90-544
R 99-90-144
CABEC
California Association of Building Energy Consultants

Project Title..... FORD-DAVALL GRP ARTISAN Date..02/03/01 11:27:03

MICROPAS5 v5.10 File-19796A2G Wth-CTZ15S92 Program-FORM CF-1R
User#-MP0207 User-Madlin's Enterprises Run-PLAN 4 w/ GUEST SUITE

FENESTRATION

Orientation		Area (sf)	U-Value	SHGC	Interior Shading	Exterior Shading	Over-hang/ Fins
Door	Left (E)	21.4	0.770	0.700	Blind	Standard	Yes
Window	Back (S)	30.0	0.750	0.700	Blind	Standard	None
Window	Back (S)	36.0	0.750	0.700	Blind	Standard	None
Window	Back (S)	4.0	0.610	0.730	Blind	Standard	None
Window	Back (S)	25.0	0.750	0.700	Blind	Standard	None
Window	Right (W)	25.0	0.750	0.700	Blind	Standard	None
Window	Right (W)	4.0	0.610	0.730	Blind	Standard	None
Window	Right (W)	4.0	0.610	0.730	Blind	Standard	None
Window	Right (W)	10.0	0.750	0.700	Blind	Standard	None
Window	Back (E)	12.5	0.750	0.700	Blind	Standard	None
Door	Back (S)	24.0	0.770	0.700	Blind	Standard	None
Window	Back (E)	20.0	0.750	0.700	Blind	Standard	None
Window	Left (E)	4.0	0.610	0.730	Blind	Standard	None
Window	Front (N)	15.0	0.750	0.700	Blind	Standard	None
Door	Front (N)	24.0	0.770	0.700	Blind	Standard	None
Window	Front (N)	15.0	0.750	0.700	Blind	Standard	None
Window	Front (N)	13.8	0.610	0.730	Standard	Standard	Yes
Window	Right (W)	45.0	0.750	0.700	Blind	Standard	None
Window	Right (W)	25.0	0.750	0.700	Blind	Standard	None
Window	Front (N)	25.0	0.750	0.700	Blind	Standard	None

Project Title..... FORD-DAVALL GRP ARTISAN Date..02/03/01 11:27:03

MICROPAS5 v5.10 File-19796A2G Wth-CTZ15S92 Program-FORM CF-1R
User#-MP0207 User-Madlin's Enterprises Run-PLAN 4 w/ GUEST SUITE

COMPLIANCE STATEMENT

This certificate of compliance lists the building features and performance specifications needed to comply with Title-24, Parts 1 and 6 of the California Code of Regulations, and the administrative regulations to implement them. This certificate has been signed by the individual with overall design responsibility. When this certificate of compliance is submitted for a single building plan to be built in multiple orientations, any shading feature that is varied is indicated in the Special Features Modeling Assumptions section.

DESIGNER or OWNER

Name.... MARIO GONZALES
Company. FORD-DaVALL GROUP, LLC.
Address. 68936 ADELENA ROAD
CATHEDRAL CITY, CA
Phone... 760-322-3422
License. _____
Signed.. _____ (date)

DOCUMENTATION AUTHOR

Name.... CATHERINE M. MADLIN
Company. Madlin's Enterprises
Address. P.O. Box 1443
Palm Springs, CA 92262
Phone... 760-322-5004
Signed.. Catherine M. Madlin (date) 2-3-01

ENFORCEMENT AGENCY

Name.... _____
Title... _____
Agency.. _____
Phone... _____
Signed.. _____ (date)

Certified Energy Analyst
Catherine M. Madlin
NR 99-90-544
R 99-90-144
CABEC
California Association of Building Energy Consultants

Project Title..... FORD-DAVALL GRP ARTISAN Date..02/03/01 11:30:12
Project Address... ARTISAN COLLECTION *******
CATHEDRAL CITY, CA *v5.10+
Documentation Author... CATHERINE M. MADLIN *******
Madlin's Enterprises
P.O. Box 1443
Palm Springs, CA 92262
760-322-5004
Climate Zone..... 15
Compliance Method..... MICROPAS5 v5.10 for 1998 Standards by Enercomp, Inc.

Building Permit #
Plan Check / Date
Field Check/ Date

MICROPAS5 v5.10 File-19798A1 Wth-CTZ15S92 Program-FORM CF-1R
User#-MP0207 User-Madlin's Enterprises Run-PLAN 3 PERMIT CALC

GENERAL INFORMATION

Conditioned Floor Area..... 2880 sf
Building Type..... Single Family Detached
Construction Type..... New
Building Front Orientation. Cardinal - N,E,S,W
Number of Dwelling Units.. 1
Number of Stories..... 1
Floor Construction Type.... Slab On Grade
Glazing Percentage..... 17.4 % of floor area
Average Glazing U-value.... 0.74 Btu/hr-sf-F
Average Glazing SHGC..... 0.7
Average Ceiling Height..... 10 ft

BUILDING SHELL INSULATION

Component Type	Frame Type	Cavity R-value	Sheathing R-value	Total R-value	Assembly U-value	Location/Comments
Wall	Wood	R-13	R-3.41	R-16.41	0.065	
Wall	Wood	R-13	R-0	R-13	0.088	
Door	None	R-0	R-0	R-0	0.330	
Roof	Wood	R-11	R-27	R-38	0.025	
SlabEdge	None	R-0	R-0		F2=0.760	
SlabEdge	None	R-0	R-0		F2=0.510	

FENESTRATION

Orientation		Area (sf)	U-Value	SHGC	Interior Shading	Exterior Shading	Over-hang/ Fins
Window	Left (E)	30.0	0.750	0.700	Blind	Standard	None
Window	Left (E)	20.0	0.750	0.700	Blind	Standard	None
Window	Left (E)	24.0	0.750	0.700	Blind	Standard	Yes
Window	Back (S)	24.0	0.750	0.700	Blind	Standard	Yes
Window	Back (S)	24.0	0.750	0.700	Blind	Standard	Yes
Window	Back (S)	40.0	0.770	0.700	Blind	Standard	Yes
Window	Back (S)	36.0	0.750	0.700	Blind	Standard	Yes
Window	Back (S)	36.0	0.750	0.700	Blind	Standard	Yes
Door	Left (E)	24.0	0.770	0.700	Blind	Standard	None
Window	Back (E)	25.0	0.750	0.700	Blind	Standard	None
Window	Back (E)	25.0	0.750	0.700	Blind	Standard	None
Window	Right (W)	15.0	0.750	0.700	Blind	Standard	None
Window	Right (W)	15.0	0.750	0.700	Blind	Standard	None

Project Title..... FORD-DAVALL GRP ARTISAN Date..02/03/01 11:30:12

MICROPAS5 v5.10 File-19798A1 Wth-CTZ15S92 Program-FORM CF-1R
User#-MP0207 User-Madlin's Enterprises Run-PLAN 3 PERMIT CALC

REMARKS

installed in every home.

The values and materials used in this compliance portfolio are the minimum required to show compliance with Title 24 Energy Conservation Standards. The owner may (at his/her option) install better materials without additional compliance calculations.

The installing hvac contractor shall provide the required CF-6R with the installed hvac equipment model numbers.

A night setback thermostat is required to be installed with the HVAC system.

The installed plumber shall provide the required CF-6R listing the water heater model number(s) and certified plumbing fixtures.

Project Title..... FORD-DAVALL GRP ARTISAN Date..02/03/01 11:30:12

MICROPAS5 v5.10 File-19798A1 Wth-CTZ15S92 Program-FORM CF-1R
User#-MP0207 User-Madlin's Enterprises Run-PLAN 3 PERMIT CALC

FENESTRATION

Orientation		Area (sf)	U-Value	SHGC	Interior Shading	Exterior Shading	Over-hang/ Fins
Window	Right (W)	25.0	0.750	0.700	Blind	Standard	None
Window	Right (W)	8.0	0.750	0.700	Blind	Standard	None
Window	Right (W)	8.0	0.750	0.700	Standard	Standard	None
Door	Front (N)	30.0	0.770	0.700	Blind	Standard	None
Door	Back (S)	16.7	0.770	0.700	Blind	Standard	None
Door	Back (S)	16.7	0.770	0.700	Blind	Standard	None
Window	Left (E)	45.0	0.610	0.730	Blind	Standard	None
Window	Front (N)	7.5	0.610	0.730	Standard	Standard	Yes
Window	Right (W)	4.0	0.750	0.700	Standard	Standard	None
Window	Front (N)	9.0	0.610	0.730	Blind	Standard	Yes

SLAB SURFACES

Slab Type	Area (sf)
Standard Slab	2880

HVAC SYSTEMS

Equipment Type	Minimum Efficiency	Duct Location	Duct R-value	Tested Duct Leakage	ACCA Manual D	Thermostat Type
Furnace	0.780 AFUE	Attic	R-4.2	No	No	Setback
ACSplit	11.00 SEER	Attic	R-4.2	No	No	Setback

WATER HEATING SYSTEMS

Tank Type	Heater Type	Distribution Type	Number in System	Energy Factor	Tank Size (gal)	External Insulation R-value
Storage	Gas	Recirc/TimeTemp	1	0.58	50	R- n/a

SPECIAL FEATURES AND MODELING ASSUMPTIONS

*** Items in this section should be documented on the plans, ***
*** installed to manufacturer and CEC specifications, and ***
*** verified during plan check and field inspection. ***

This is a multiple orientation building with no orientation restrictions.
This printout is for the front facing North.

REMARKS

This plan has glazing options for different elevations. The largest glazing options have been used for the purpose of demonstrating compliance with Title 24.

The DHW recirculating system is a buyer option and may not be installed in every home.

The values and materials used in this compliance portfolio are the minimum required to show compliance with Title 24 Energy Conservation Standards. The owner may (at his/her option) install better materials without additional compliance calculations.

The installing hvac contractor shall provide the required CF-6R with the installed hvac equipment model numbers.

A night setback thermostat is required to be installed with the HVAC system.

The installed plumber shall provide the required CF-6R listing the water heater model number(s) and certified plumbing fixtures.

Project Title..... FORD-DAVALL GRP ARTISAN Date..02/03/01 11:30:12

MICROPAS5 v5.10 File-19798A1 Wth-CTZ15S92 Program-FORM CF-1R
User#-MP0207 User-Madlin's Enterprises Run-PLAN 3 PERMIT CALC

COMPLIANCE STATEMENT

This certificate of compliance lists the building features and performance specifications needed to comply with Title-24, Parts 1 and 6 of the California Code of Regulations, and the administrative regulations to implement them. This certificate has been signed by the individual with overall design responsibility. When this certificate of compliance is submitted for a single building plan to be built in multiple orientations, any shading feature that is varied is indicated in the Special Features Modeling Assumptions section.

DESIGNER or OWNER

Name.... MARIO GONZALES
Company. FORD-DaVALL GROUP, LLC.
Address. 68936 ADELENA ROAD
CATHEDRAL CITY, CA
Phone... 760-322-3422
License. _____
Signed.. _____ (date)

DOCUMENTATION AUTHOR

Name.... CATHERINE M. MADLIN
Company. Madlin's Enterprises
Address. P.O. Box 1443
Palm Springs, CA 92262
Phone... 760-322-5004
Signed.. Catherine M. Madlin (date) 2-3-01

ENFORCEMENT AGENCY

Name.... _____
Title... _____
Agency.. _____
Phone... _____
Signed.. _____ (date)

Certified Energy Analyst
Catherine M. Madlin
NR 99-90-544
R 99-90-144
CABEC
California Association of Building Energy Consultants

ARTHUR C. DANIELIAN
Reg. No. C 4829
REGISTERED PROFESSIONAL ARCHITECT
STATE OF CALIFORNIA

NO.	DATE	REVISION

PROJECT TITLE

ARTISAN COLLECTION

PROJECT NO. 00052

SHEET TITLE

T-24

CERTIFICATE OF COMPLIANCE

ORIGINAL DATE:

©

©

©

©

PRINT DATE

SHEET NO.

G-7

D:\MTEC\00052\Temp\T-24.dwg Thu Feb 08 15:13:04 2001

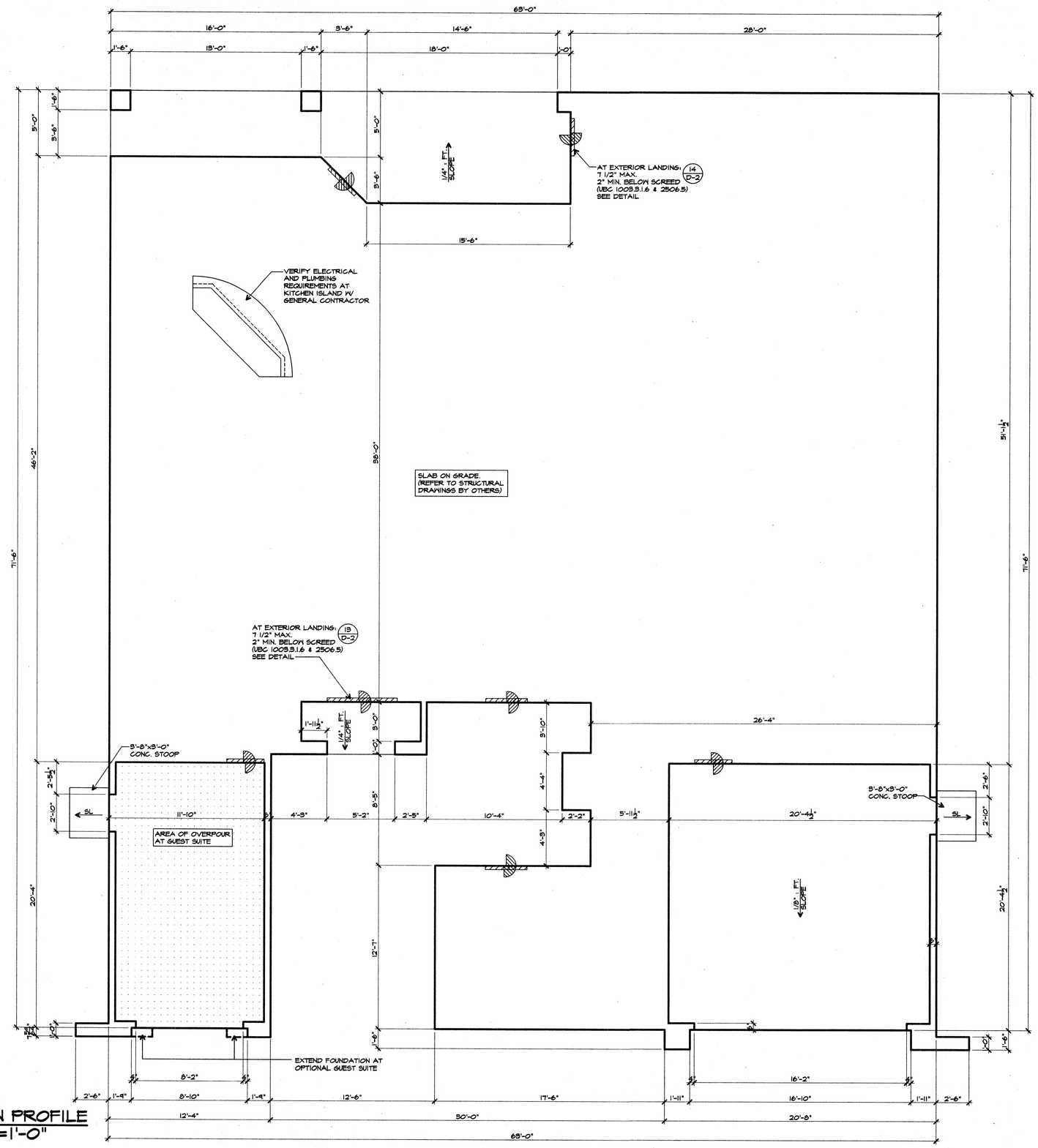

FOUNDATION NOTES

THIS PROFILE IS FOR DIMENSIONAL INFORMATION ONLY.

REFER TO DRAWINGS BY OTHERS FOR ALL STRUCTURAL INFORMATION. STRUCTURAL ENGINEER SHALL PROVIDE ARCHITECT WITH FINAL DRAWINGS PRIOR TO CONSTRUCTION.

REFER TO CIVIL AND LANDSCAPE DRAWINGS FOR ENTRY PORCHES, PATIOS, STOOPS, WALKS DRIVEWAYS, WALLS, STEPS, ETC. NOT SHOWN HERE

REFER TO CIVIL DRAWINGS FOR ALL BUILDING LOCATIONS, GRADING, AND FINISH FLOOR ELEVATION INFORMATION.

NOTE:
EXTERIOR ELEVATION 'A' SHOWN
SEE ALTERNATE PLAN SHEETS FOR ALL
ALTERNATE PLAN AND ELEVATION
CHANGES.

FOUNDATION PROFILE
SCALE: 1/4"=1'-0"

DANIELIAN ASSOCIATES
ARCHITECTURE & PLANNING
SIXTY CORPORATE PARK
IRVINE, CALIFORNIA 92606
(949) 474-6080
FAX: (949) 474-1422
WWW.DANIELIAN.COM

© DANIELIAN ASSOCIATES EXPRESSLY RESERVES ITS COMMON LAW COPYRIGHT AND OTHER PROPERTY RIGHTS IN THESE PLANS. THESE PLANS ARE NOT TO BE REPRODUCED CHANGED OR COPIED IN ANY FORM OR MANNER WHATSOEVER, NOR ARE THEY TO BE ASSIGNED TO ANY THIRD PARTY WITHOUT FIRST OBTAINING THE EXPRESSED WRITTEN PERMISSION AND CONSENT OF DANIELIAN ASSOCIATES.

ARTHUR C. DANIELIAN RCE No. C 4829 REGISTERED PROFESSIONAL ARCHITECT STATE OF CALIFORNIA

NO.	DATE	REVISION

PROJECT TITLE
ARTISAN COLLECTION

PROJECT NO. 00052

SHEET TITLE
PLAN 4

FOUNDATION PROFILE

'A' ELEV.

ORIGINAL DATE:

PRINT DATE

SHEET NO. A-4.1

X:\MTEC\00052\Production\00052401.dwg Mon Feb 19 10:45:53 2001

REFERENCE NOTES

FOR:	REFER TO:
SYMBOLS AND ABBREVIATIONS	SHEET G-1
FOUNDATION INFORMATION	T-1 (INDEX) FOUNDATION PROFILE STRUCTURAL DRAWINGS / DETAILS BY OTHERS. GENERAL NOTES SECTION 9A
FRAMING INFORMATION	STRUCTURAL DRAWINGS / DETAILS BY OTHERS GENERAL NOTES SECTION 6A
ELECTRICAL INFORMATION	T-1 (INDEX) ELECTRICAL PLANS G-1 and GENERAL NOTES SECTION 16A
CEILING VOLUME/ INTERIOR SHELF INFORMATION	G-1, and FLOOR PLAN
INTERIOR FINISH SCHEDULE	GENERAL NOTES SECTIONS 9, 10A
EXT. HARDSCAPE, STEPS, PLANTERS, ETC.	LANDSCAPE DRAWINGS BY OTHERS CIVIL DRAWINGS BY OTHERS
FIREPLACE INFORMATION	G-1 and GENERAL NOTES SECTION 10A

AREA CALCULATIONS

STANDARD PLAN	
TOTAL LIVING AREA	3,137 SQ. FT
GARAGE 1	403 SQ. FT
GARAGE 2	235 SQ. FT
COVERED PORCH	27 SQ. FT
COVERED PATIO	235 SQ. FT
OPT. GUEST SUITE	235 SQ. FT

NOTE:
EXTERIOR ELEVATION 'A' SHOWN.
SEE ALTERNATE PLAN SHEETS FOR ALL ALTERNATE PLAN AND ELEVATION CHANGES.

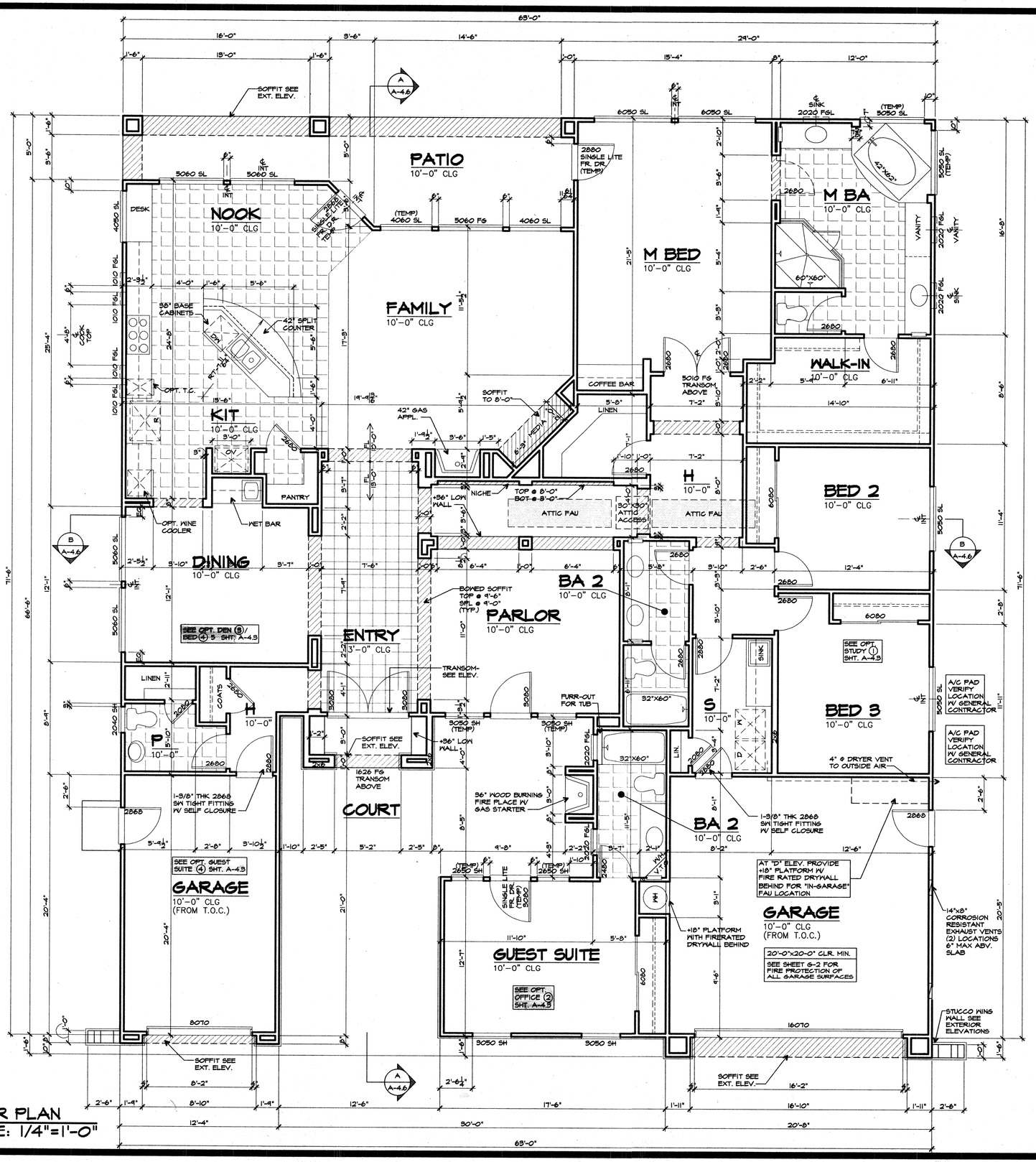

FLOOR PLAN
SCALE: 1/4"=1'-0"

DANIELIAN ASSOCIATES
ARCHITECTURE & PLANNING
SIXTY CORPORATE PARK
IRVINE, CALIFORNIA 92606
(949) 474-6080
FAX: (949) 474-1422
WWW.DANIELIAN.COM

© DANIELIAN ASSOCIATES EXPRESSLY RESERVES ITS COMMON LAW COPYRIGHT AND OTHER PROPERTY RIGHTS IN THESE PLANS. THESE PLANS ARE NOT TO BE REPRODUCED CHANGED OR COPIED IN ANY FORM OR MANNER WHATSOEVER, NOR ARE THEY TO BE ASSIGNED TO ANY THIRD PARTY WITHOUT FIRST OBTAINING THE EXPRESSED WRITTEN PERMISSION AND CONSENT OF DANIELIAN ASSOCIATES.

REGISTERED PROFESSIONAL ARCHITECT
ARTHUR C. DANIELIAN
REG. NO. C 6529
STATE OF CALIFORNIA

NO.	DATE	REVISION

PROJECT TITLE
ARTISAN COLLECTION

PROJECT NO. 00052

SHEET TITLE
PLAN 4
FLOOR PLAN
'A' ELEV.

ORIGINAL DATE:
©
©
©
©

PRINT DATE

SHEET NO. A-4.2

D:\MTEC\00052\Production\00052A02.dwg Mon Feb 19 10:46:19 2001

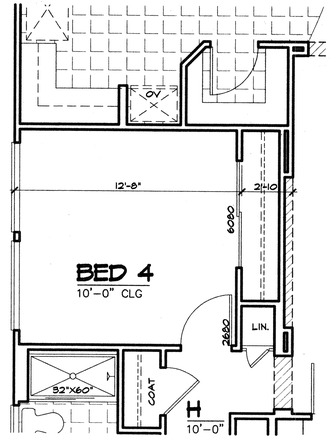

5 OPTIONAL BED 4
NO SQ. FT. ADDED

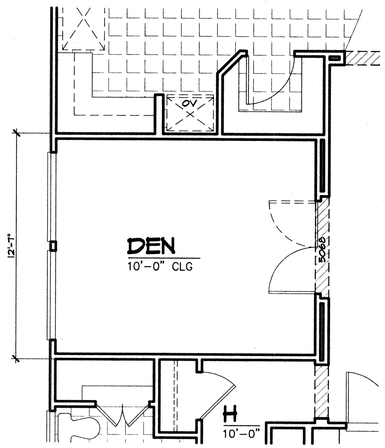

3 OPTIONAL DEN
NO SQ. FT. ADDED

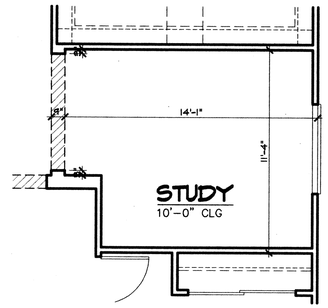

1 OPTIONAL STUDY
NO SQ. FT. ADDED

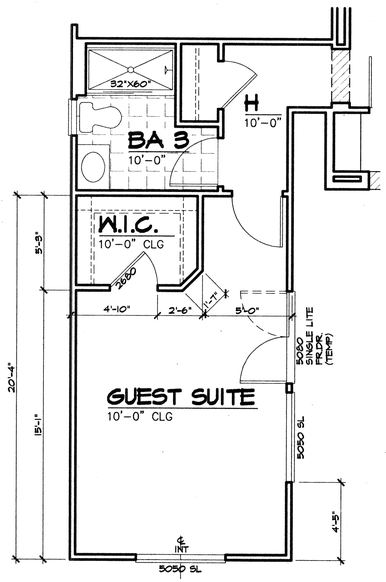

4 OPTIONAL GUEST SUITE
254 SQ. FT. ADDED

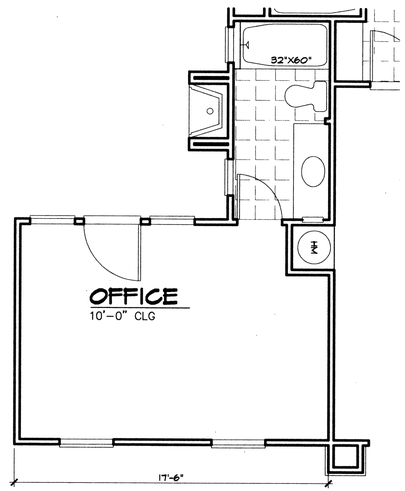

2 OPTIONAL OFFICE
NO SQ. FT. ADDED

SCALE: 1/4"=1'-0"

NOTE:
EXTERIOR ELEVATION 'A' SHOWN
SEE ALTERNATE PLAN SHEETS FOR ALL ALTERNATE PLAN AND ELEVATION CHANGES.

DANIELIAN ASSOCIATES
ARCHITECTURE & PLANNING
SIXTY CORPORATE PARK
IRVINE, CALIFORNIA 92606
(949) 474-6030
FAX: (949) 474-1422
WWW.DANIELIAN.COM

© DANIELIAN ASSOCIATES EXPRESSLY RESERVES ITS COMMON LAW COPYRIGHT AND OTHER PROPERTY RIGHTS IN THESE PLANS. THESE PLANS ARE NOT TO BE REPRODUCED CHANGED OR COPIED IN ANY FORM OR MANNER WHATSOEVER, NOR ARE THEY TO BE ASSIGNED TO ANY THIRD PARTY WITHOUT FIRST OBTAINING THE EXPRESSED WRITTEN PERMISSION AND CONSENT OF DANIELIAN ASSOCIATES.

REGISTERED PROFESSIONAL ARCHITECT
ARTHUR C. DANIELIAN
REG. NO. C 4829
STATE OF CALIFORNIA

NO.	DATE	REVISION

PROJECT TITLE
ARTISAN COLLECTION

PROJECT NO. 00052

SHEET TITLE
PLAN 4
OPTIONS
'A' ELEV.

ORIGINAL DATE:
©
©
©
©

PRINT DATE

SHEET NO. A-4.3

D:\WTEC\00052\Production\00052403.dwg Mon Feb 19 10:46:47 2001

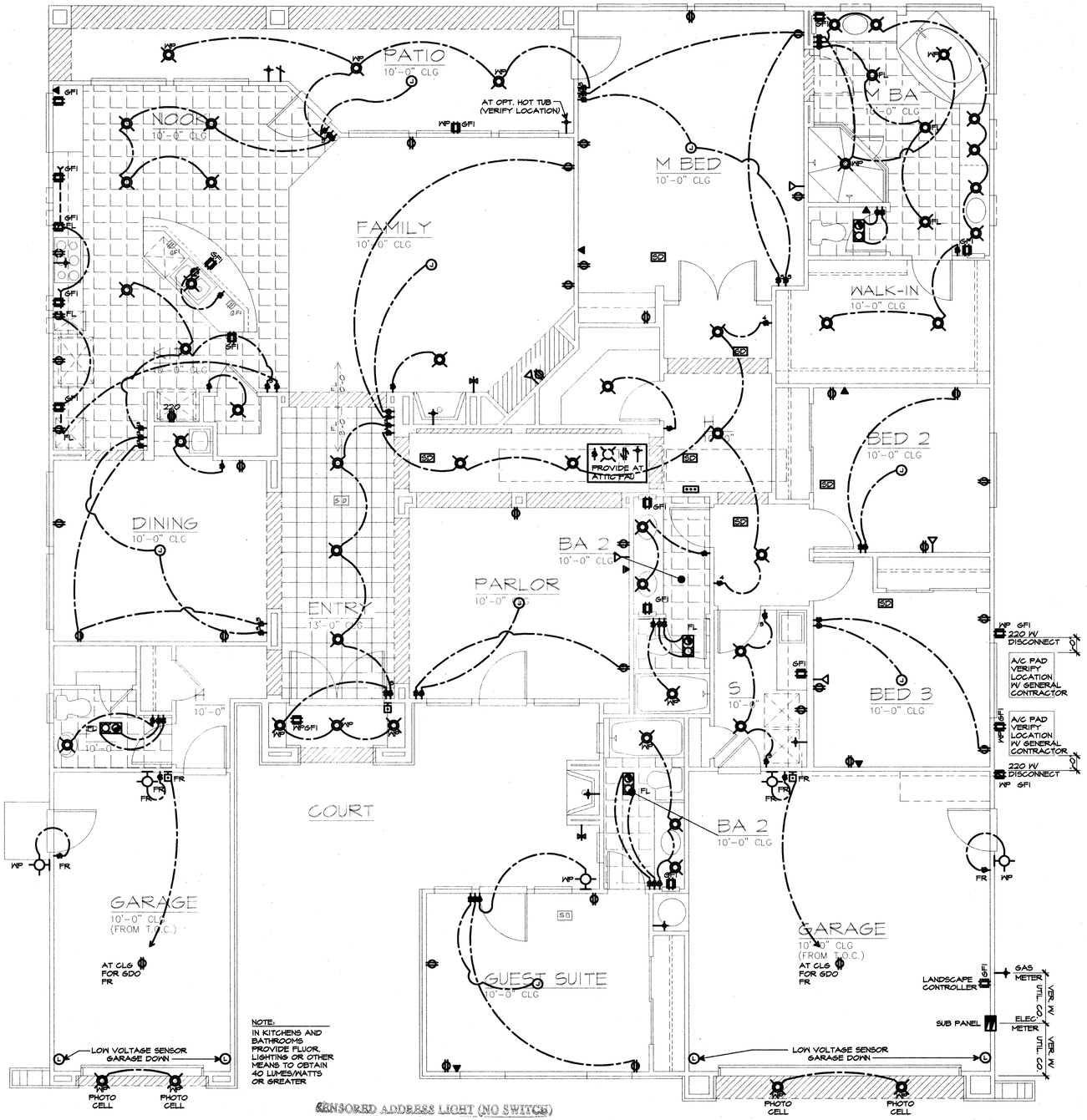

REFERENCE NOTES

FOR:	REFER TO:
SYMBOLS AND ABBREVIATIONS	SHEET G-1
FOUNDATION INFORMATION	T-1 (INDEX) FOUNDATION PROFILE STRUCTURAL DRAWING / DETAILS BY OTHERS. GENERAL NOTES SECTION 3A
FRAMING INFORMATION	STRUCTURAL DRAWINGS / DETAILS BY OTHERS GENERAL NOTES SECTION 6A
ELECTRICAL INFORMATION	T-1 (INDEX) ELECTRICAL PLANS G-1 and GENERAL NOTES SECTION 16A
CEILING VOLUME/ INTERIOR SHELF INFORMATION	G-1, and FLOOR PLAN
INTERIOR FINISH SCHEDULE	GENERAL NOTES SECTIONS 9, 10A
EXT. HARDSCAPE, STEPS, PLANTERS, ETC.	LANDSCAPE DRAWINGS BY OTHERS CIVIL DRAWINGS BY OTHERS
FIREPLACE INFORMATION	G-1 and GENERAL NOTES SECTION 10A

NOTE:
EXTERIOR ELEVATION 'A' SHOWN
SEE ALTERNATE PLAN SHEETS FOR ALL ALTERNATE PLAN AND ELEVATION CHANGES.

FLOOR PLAN
SCALE: 1/4"=1'-0"

DANIELIAN ASSOCIATES
ARCHITECTURE & PLANNING
SIXTY CORPORATE PARK
IRVINE, CALIFORNIA 92606
(949) 474-6030
FAX: (949) 474-1422
WWW.DANIELIAN.COM

© DANIELIAN ASSOCIATES EXPRESSLY RESERVES ITS COMMON LAW COPYRIGHT AND OTHER PROPERTY RIGHTS IN THESE PLANS. THESE PLANS ARE NOT TO BE REPRODUCED CHANGED OR COPIED IN ANY FORM OR MANNER WHATSOEVER, NOR ARE THEY TO BE ASSIGNED TO ANY THIRD PARTY WITHOUT FIRST OBTAINING THE EXPRESSED WRITTEN PERMISSION AND CONSENT OF DANIELIAN ASSOCIATES.

REGISTERED PROFESSIONAL ARCHITECT
ARTHUR C. DANIELIAN
REG. NO. C 4829
STATE OF CALIFORNIA

NO.	DATE	REVISION

PROJECT TITLE
ARTISAN COLLECTION

PROJECT NO. 00052

SHEET TITLE
PLAN 4
UTILITY PLAN
'A' ELEV.

ORIGINAL DATE:
PRINT DATE

SHEET NO. A-4.4

D:\MTEC\00052\Production\00052404.dwg Mon Feb 19 10:48:06 2001

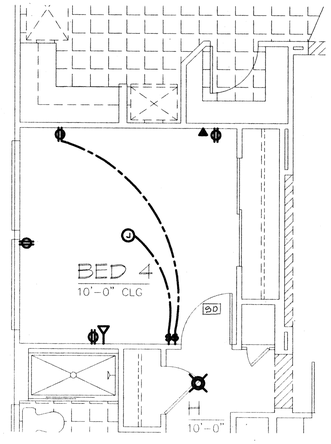

5 OPTIONAL BED 4
NO SQ. FT. ADDED

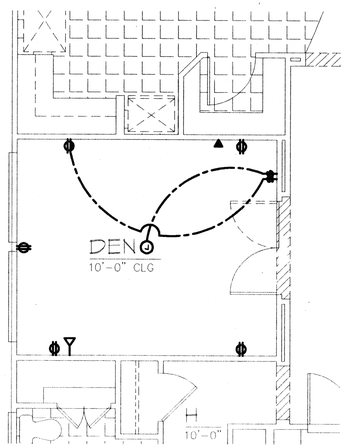

3 OPTIONAL DEN
NO SQ. FT. ADDED

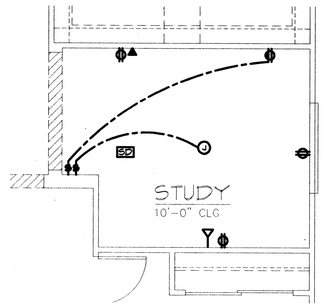

1 OPTIONAL STUDY
NO SQ. FT. ADDED

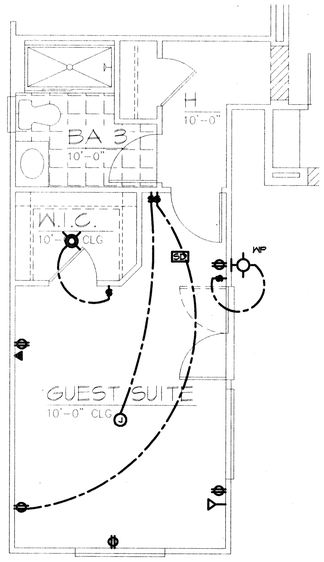

4 OPTIONAL GUEST SUITE
254 SQ. FT. ADDED

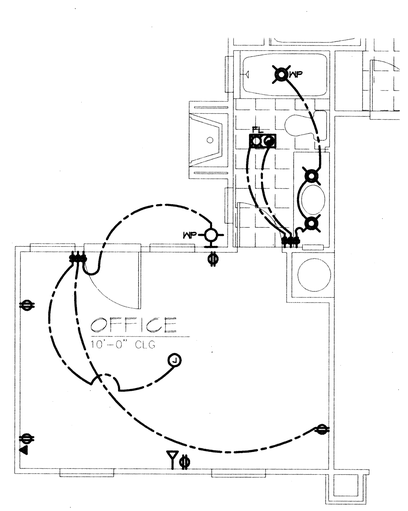

2 OPTIONAL OFFICE
NO SQ. FT. ADDED

SCALE: 1/4"=1'-0"

NOTE:
EXTERIOR ELEVATION 'A' SHOWN
SEE ALTERNATE PLAN SHEETS FOR ALL
ALTERNATE PLAN AND ELEVATION
CHANGES.

DANIELIAN ASSOCIATES
ARCHITECTURE & PLANNING
SIXTY CORPORATE PARK
IRVINE, CALIFORNIA 92606
(949) 474-6030
FAX: (949) 474-1422
WWW.DANIELIAN.COM

© DANIELIAN ASSOCIATES EXPRESSLY RESERVES ITS COMMON LAW COPYRIGHT AND OTHER PROPERTY RIGHTS IN THESE PLANS. THESE PLANS ARE NOT TO BE REPRODUCED CHANGED OR COPIED IN ANY FORM OR MANNER WHATSOEVER NOR ARE THEY TO BE ASSIGNED TO ANY THIRD PARTY WITHOUT FIRST OBTAINING THE EXPRESSED WRITTEN PERMISSION AND CONSENT OF DANIELIAN ASSOCIATES.

REGISTERED PROFESSIONAL ARCHITECT
ARTHUR C. DANIELIAN
No. C 4829
STATE OF CALIFORNIA

NO.	DATE	REVISION

PROJECT TITLE
ARTISAN COLLECTION

PROJECT NO. 00052

SHEET TITLE
PLAN 4

UTILITY PLAN/ OPTIONS 'A' ELEV.

ORIGINAL DATE:
©
©
©
©

PRINT DATE

SHEET NO.
A-4.5

D:\MTEC\000520\Production\00052A05.dwg Mon Feb 19 10:48:33 2001

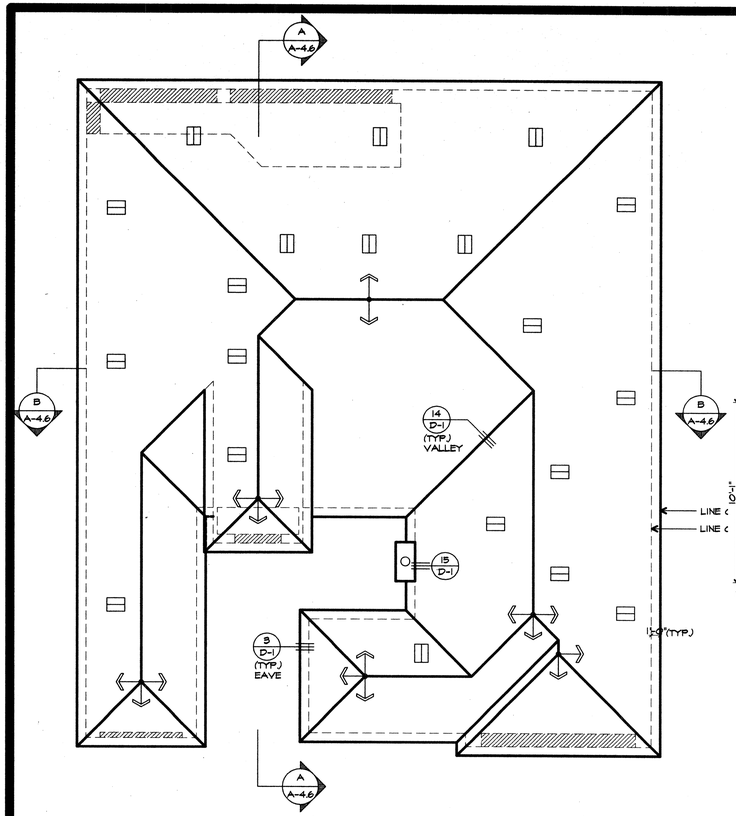

ROOF PLAN
SCALE: 1/8"=1'-0"

ROOF PITCH AT 4:12 U.N.O.

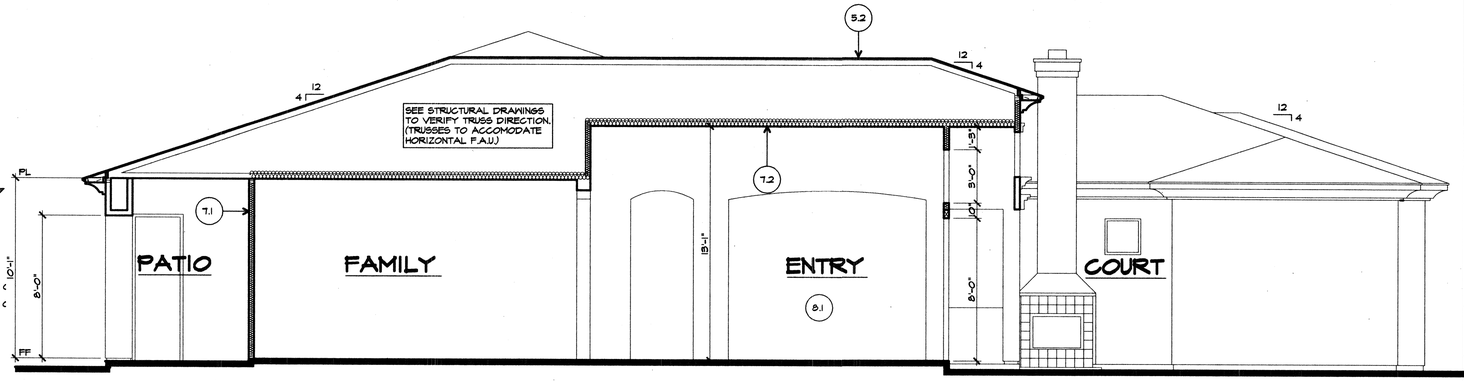

SECTION A

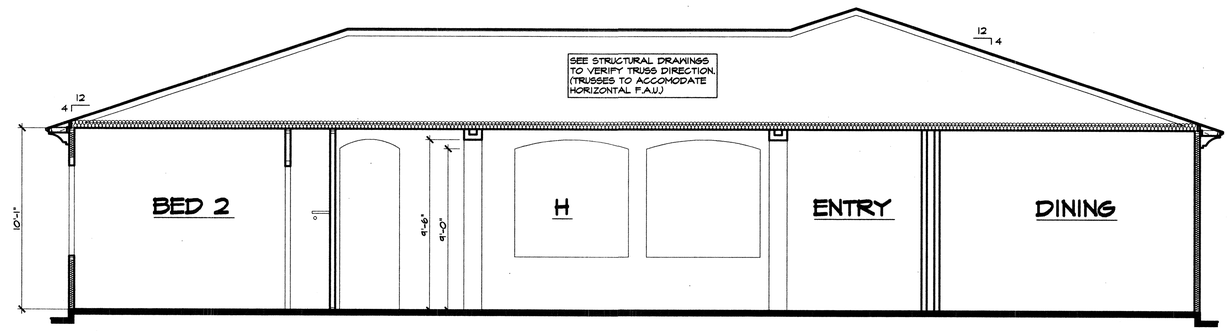

SECTION B
SCALE: 1/4"=1'-0"

ATTIC VENTILATION CALCULATIONS

50% HIGH AND LOW VENTILATION

1. TOTAL ATTIC SPACE CALCULATION:

   A. 4122 SQ. FT. x 144 = 593568 SQ. IN. OF ATTIC

2. TOTAL VENTILATION REQUIRED:
   (ASSUMES CODE REQUIREMENT OF A MIN. OF 50% OF HIGH VENT.
   AREA PROVIDED TO BE A MIN. OF 3' ABV. EAVE VENTS)

   A. 593568 SQ. IN. ÷ 300 = 1979 TOTAL SQ. IN. OF VENTILATION REQUIRED

   B. 1979 SQ. IN. ÷ 2 = 990 MIN. SQ. IN. AREA OF HIGH VENT.
   (BALANCE REQ. IN LOW VENTILATION)

3. TOTAL VENTILATION PROVIDED:

   A. HIGH VENTILATION PROVIDED:
   10 AT 100 SQ. IN. EACH = 1000 SQ. IN. OF O'HAGIN DORMER VENTS
   (MUST BE 3' ABOVE LOW VENTILATION)
   1000 TOTAL SQ. IN. HIGH VENTILATION

   B. LOW VENTILATION PROVIDED:
   10 AT 100 SQ. IN. EACH = 1000 SQ. IN. OF O'HAGIN DORMER VENTS

   (REFER TO DETAILS)
   1000 TOTAL SQ. IN. OF LOW VENTILATION

   C. TOTAL VENTILATION PROVIDED: 2000 SQ. IN.
   (HIGH VENT. + LOW VENT) SEE ROOF PLAN

NOTE:
EXTERIOR ELEVATION 'A' SHOWN
SEE ALTERNATE PLAN SHEETS FOR ALL
ALTERNATE PLAN AND ELEVATION
CHANGES.

SECTION NOTES

ROOFING:

5.1 PITCHED PROFILE TILE ROOF AT 4:12 SLOPE U.N.O.
SEE ROOF PLAN, DETAILS AND GENERAL NOTES SECTION 7A.

5.2 PITCHED FLAT TILE ROOF AT 4:12 SLOPE U.N.O.
SEE ROOF PLAN, DETAILS AND GENERAL NOTES SECTION 7A.

CONCRETE SLAB:

6.1 SEE FOUNDATION PROFILE AND GENERAL NOTES SECTION 9A AND STRUCTURAL DRAWINGS BY OTHERS FOR ADDITIONAL INFORMATION.

INSULATION: PER ENERGY CALCULATIONS

7.1 EXTERIOR WALLS
7.2 CEILING WITH ATTIC ABOVE
7.3 VAULTED CEILING
7.4 KNEE WALLS BETWEEN ATTIC AND LIVING SPACES
7.5 FLOOR OVER GARAGE

INTERIOR MATERIALS:

8.1 TYPICAL WALLS AND CEILINGS:
1/2" GYP BD (5/8" GYP BD AT CEILING IF FRAMING IS GREATER THAN 16" O.C.)

8.2 AT WET AREAS:
1/2" MOISTURE RESISTANT GYP BD AS RECOMMENDED BY MANUFACTURER.

8.3 FIRE PROTECTION:
SEE SHEET G-2 FOR FIRE PROTECTION OF ALL GARAGE SURFACES.

NOTE:
GENERAL CONTRACTOR SHALL VERIFY THE NET FREE VENTILATION OF THE VENT PRODUCT SELECTED AGAINST THOSE NOTED ABOVE. THE REQUIRED VENTILATION SHALL BE MAINTAINED.
PROVIDE INSULATION STOP SUCH THAT INSULATION DOES NOT OBSTRUCT FREE AIR MOVEMENT AS REQUIRED BY THE BUILDING OFFICIAL.

ALL OVERLAP FRAMED ROOF AREAS SHALL HAVE OPENINGS BETWEEN THE ADJACENT ATTICS IN THE ROOF SHEATHING (AS ALLOWED BY THE STRUCTURAL ENGINEER) TO ALLOW AIR PASSAGE AND ATTIC VENTILATION BETWEEN THE TWO OR, ISOLATED ATTIC SPACES SHALL BE VENTED INDEPENDENTLY TO UBC REQUIREMENTS.

THE FOUNDATION AND FRAMING ELEMENTS SHOWN HERE ARE GENERIC IN NATURE AND MAY NOT BE CONSISTANT WITH THE ACTUAL STRUCTURAL ENGINEERED REQUIREMENTS FOR THIS PROJECT. REFER TO THE STRUCTURAL DRAWINGS, DETAILS AND CALCULATIONS BY OTHERS FOR ALL STRUCTURAL INFORMATION.

DANIELIAN ASSOCIATES
ARCHITECTURE & PLANNING
SIXTY CORPORATE PARK
IRVINE, CALIFORNIA 92606
(949) 474-6030
FAX: (949) 474-1422
WWW.DANIELIAN.COM

© DANIELIAN ASSOCIATES EXPRESSLY RESERVES ITS COMMON LAW COPYRIGHT AND OTHER PROPERTY RIGHTS IN THESE PLANS. THESE PLANS ARE NOT TO BE REPRODUCED CHANGED OR COPIED IN ANY FORM OR MANNER WHATSOEVER. NOR ARE THEY TO BE ASSIGNED TO ANY THIRD PARTY WITHOUT FIRST OBTAINING THE EXPRESSED WRITTEN PERMISSION AND CONSENT OF DANIELIAN ASSOCIATES.

REGISTERED PROFESSIONAL ARCHITECT — STATE OF CALIFORNIA — ARTHUR C. DANIELIAN — Reg. No. 4829

NO.	DATE	REVISION

PROJECT TITLE
ARTISAN COLLECTION

PROJECT NO. 00052

SHEET TITLE
PLAN 4
SECTIONS/ ROOF PLAN
'A' ELEV.

ORIGINAL DATE:

PRINT DATE

SHEET NO. A-4.6

D:\MTEC\00052\Production\00052406.dwg Mon Feb 19 10:49:51 2001

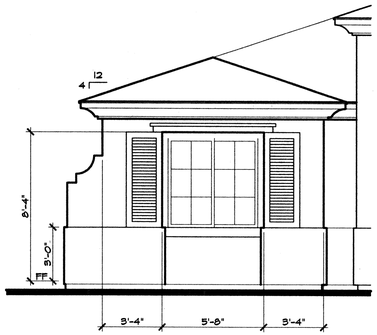

OPT. GUEST SUITE

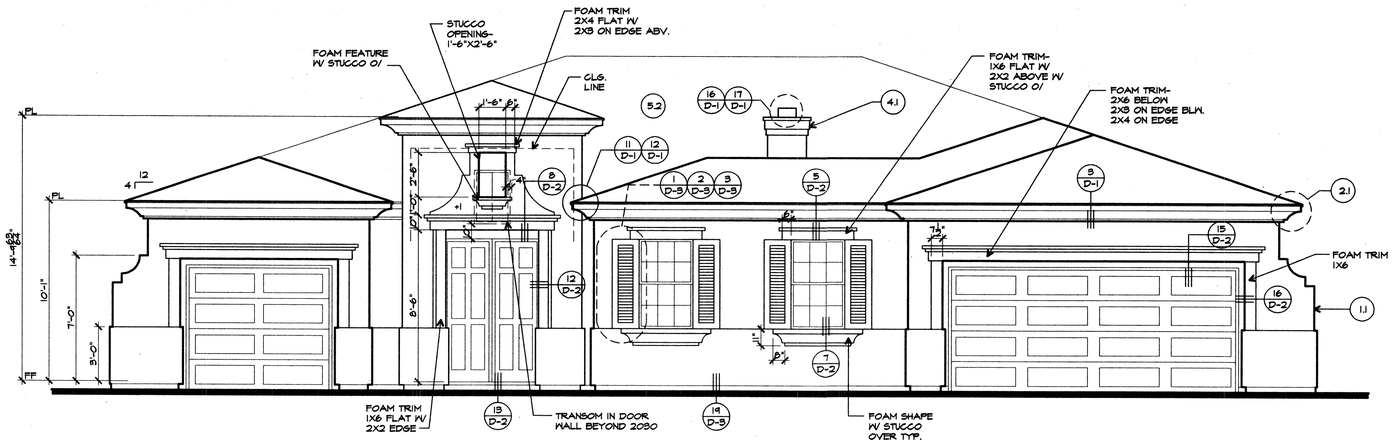

FRONT

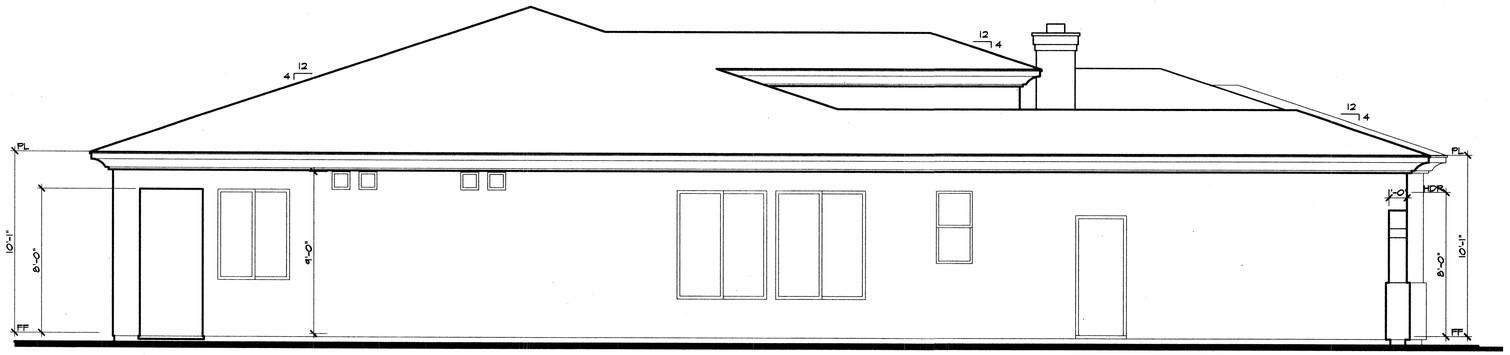

LEFT
SCALE: 1/4"=1'-0"

NOTE:
EXTERIOR ELEVATION 'A' SHOWN
SEE ALTERNATE PLAN SHEETS FOR ALL ALTERNATE PLAN AND ELEVATION CHANGES.

ELEVATION NOTES

EXTERIOR MATERIALS:
- 1.1 STUCCO
- 1.2 SOFFITS / BOTTOM OF CANTILEVERED AREAS: STUCCO
- 1.3 MANUFACTURED ADHERED STONE VENEER

TRIM:
- 2.1 FASCIA: REFER TO DETAIL.
- 2.2 DOORS AND WINDOWS: STUCCO WRAPPED 2"x4" FOAM U.N.O., SEE DETAILS.

GUTTERS:
- 3.1 ALL ROOFS TO BE GUTTERED WITH DOWN SPOUTS AS INDICATED ON ROOF PLAN AND DETAILS.

CHIMNEY:
- 4.1 TOP TO EXTEND 2'-0" MINIMUM ABOVE ANY ROOF WITHIN 10'-0".

ROOFING:
- 5.1 PITCHED PROFILE TILE ROOF AT 4:12 SLOPE. SEE ROOF PLAN, DETAILS AND GENERAL NOTES SECTION 7A.
- 5.2 PITCHED FLAT TILE ROOF AT 4:12 SLOPE. SEE ROOF PLAN, DETAILS AND GENERAL NOTES SECTION 7A.

NOTE TO ALL SUBCONTRACTORS:
REFER TO ARCHITECTURAL DETAILS FOR LOCATION OF ELASTOMERIC MEMBRANE UNDER EXTERIOR MATERIALS.

DANIELIAN ASSOCIATES
ARCHITECTURE & PLANNING
SIXTY CORPORATE PARK
IRVINE, CALIFORNIA 92606
(949) 474-6080
FAX: (949) 474-1422
WWW.DANIELIAN.COM

© DANIELIAN ASSOCIATES EXPRESSLY RESERVES ITS COMMON LAW COPYRIGHT AND OTHER PROPERTY RIGHTS IN THESE PLANS. THESE PLANS ARE NOT TO BE REPRODUCED CHANGED OR COPIED IN ANY FORM OR MANNER WHATSOEVER, NOR ARE THEY TO BE ASSIGNED TO ANY THIRD PARTY WITHOUT FIRST OBTAINING THE EXPRESSED WRITTEN PERMISSION AND CONSENT OF DANIELIAN ASSOCIATES.

REGISTERED PROFESSIONAL ARCHITECT
ARTHUR C. DANIELIAN
NO. C-4629
STATE OF CALIFORNIA

NO.	DATE	REVISION

PROJECT TITLE
ARTISAN COLLECTION

PROJECT NO. 00052

SHEET TITLE
PLAN 4

EXTERIOR ELEVATIONS

'A' ELEV.

ORIGINAL DATE:
©
©
©
©

PRINT DATE

SHEET NO.
A-4.7

D:\MTEC\00052\Production\00052407.dwg Mon Feb 19 10:50:45 2001

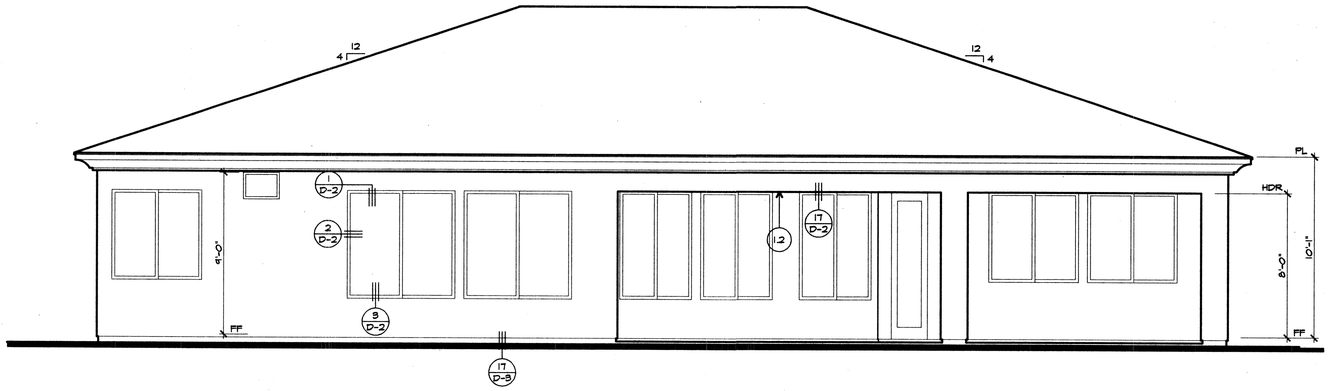

REAR

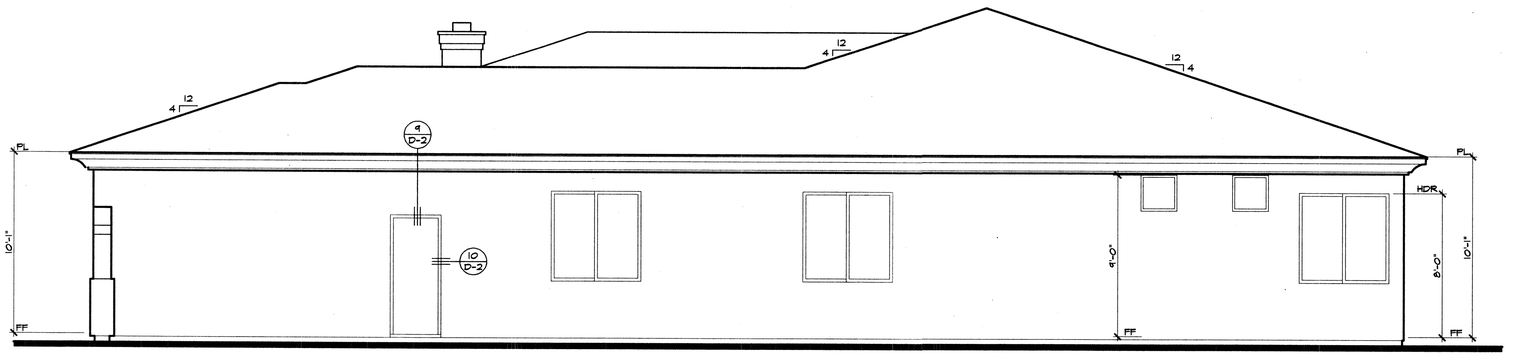

RIGHT
SCALE: 1/4"=1'-0"

NOTE:
EXTERIOR ELEVATION 'A' SHOWN
SEE ALTERNATE PLAN SHEETS FOR ALL ALTERNATE PLAN AND ELEVATION CHANGES.

DANIELIAN ASSOCIATES
ARCHITECTURE & PLANNING
SIXTY CORPORATE PARK
IRVINE, CALIFORNIA 92606
(949) 474-6030
FAX: (949) 474-1422
WWW.DANIELIAN.COM

© DANIELIAN ASSOCIATES EXPRESSLY RESERVES ITS COMMON LAW COPYRIGHT AND OTHER PROPERTY RIGHTS IN THESE PLANS. THESE PLANS ARE NOT TO BE REPRODUCED CHANGED OR COPIED IN ANY FORM OR MANNER WHATSOEVER. NOR ARE THEY TO BE ASSIGNED TO ANY THIRD PARTY WITHOUT FIRST OBTAINING THE EXPRESSED WRITTEN PERMISSION AND CONSENT OF DANIELIAN ASSOCIATES.

REGISTERED PROFESSIONAL ARCHITECT
ARTHUR C. DANIELIAN
Reg. No. C 4829
STATE OF CALIFORNIA

NO.	DATE	REVISION

PROJECT TITLE
ARTISAN COLLECTION

PROJECT NO. 00052

SHEET TITLE
PLAN 4

EXTERIOR ELEVATIONS

'A' ELEV.

ORIGINAL DATE:
@
@
@
@

PRINT DATE

SHEET NO. A-4.8

J:\MTEC\00052\Production\00052408.dwg Mon Feb 19 10:51:41 2001

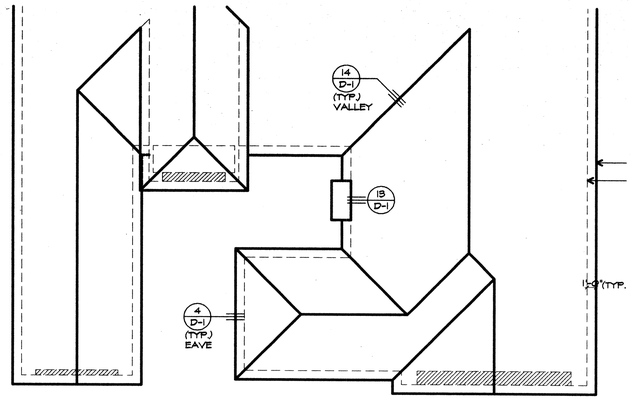

ROOF PLAN
SCALE: 1/8"=1'-0"

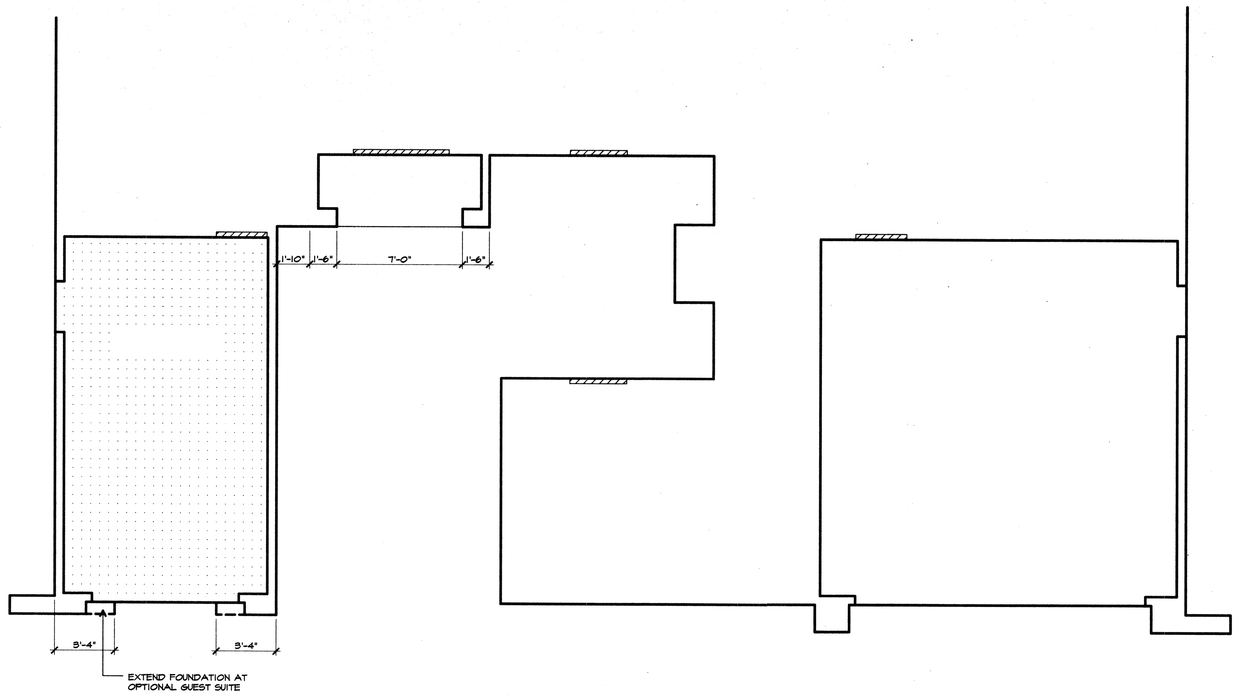

FOUNDATION PROFILE

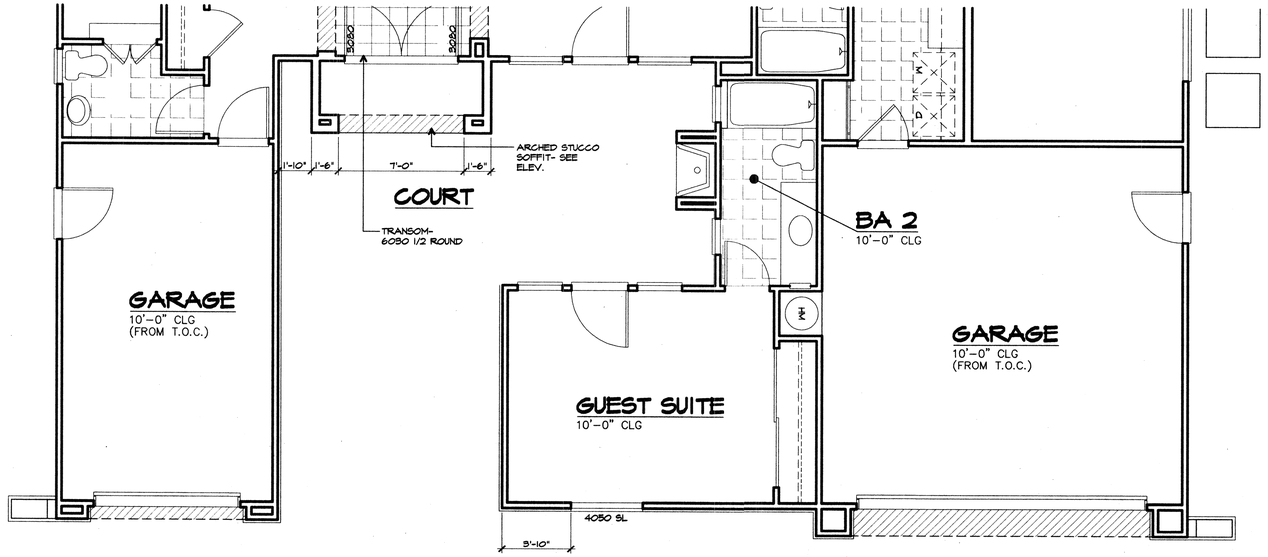

NOTE:
REFER TO THE FOLLOWING SHEETS FOR INFORMATION NOT SHOWN HERE.

FOUNDATION PROFILE	-SEE SHEET A-4.1
FLOOR PLAN	-SEE SHEET A-4.2 & A-4.3
ELECTRICAL PLAN	-SEE SHEET A-4.4 & A-4.5
ROOF PLAN	-SEE SHEET A-4.6
EXTERIOR ELEVATIONS	-SEE SHEET A-4.7
EXTERIOR ELEVATIONS	-SEE SHEET A-4.8

FLOOR PLAN
SCALE: 1/4"=1'-0"

DANIELIAN ASSOCIATES
ARCHITECTURE & PLANNING
SIXTY CORPORATE PARK
IRVINE, CALIFORNIA 92606
(949) 474-6030
FAX: (949) 474-1422
WWW.DANIELIAN.COM

© DANIELIAN ASSOCIATES EXPRESSLY RESERVES ITS COMMON LAW COPYRIGHT AND OTHER PROPERTY RIGHTS IN THESE PLANS. THESE PLANS ARE NOT TO BE REPRODUCED CHANGED OR COPIED IN ANY FORM OR MANNER WHATSOEVER, NOR ARE THEY TO BE ASSIGNED TO ANY THIRD PARTY WITHOUT FIRST OBTAINING THE EXPRESSED WRITTEN PERMISSION AND CONSENT OF DANIELIAN ASSOCIATES.

REGISTERED PROFESSIONAL ARCHITECT
ARTHUR C. DANIELIAN
Reg. No. C 4829
STATE OF CALIFORNIA

NO.	DATE	REVISION

PROJECT TITLE
ARTISAN COLLECTION

PROJECT NO. 00052

SHEET TITLE
PLAN 4
FLOOR PLAN
ROOF PLAN
'B' ELEV.

ORIGINAL DATE:
©
©
©
©

PRINT DATE

SHEET NO. A-4.9

D:\MTEC\00052\Production\00052409.dwg Mon Feb 19 10:52:22 2001

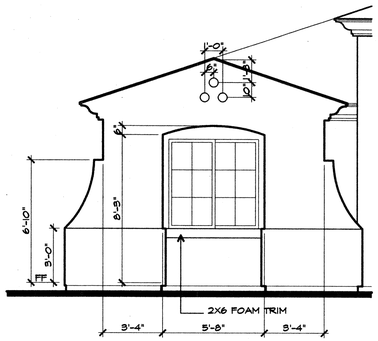

OPT. GUEST SUITE

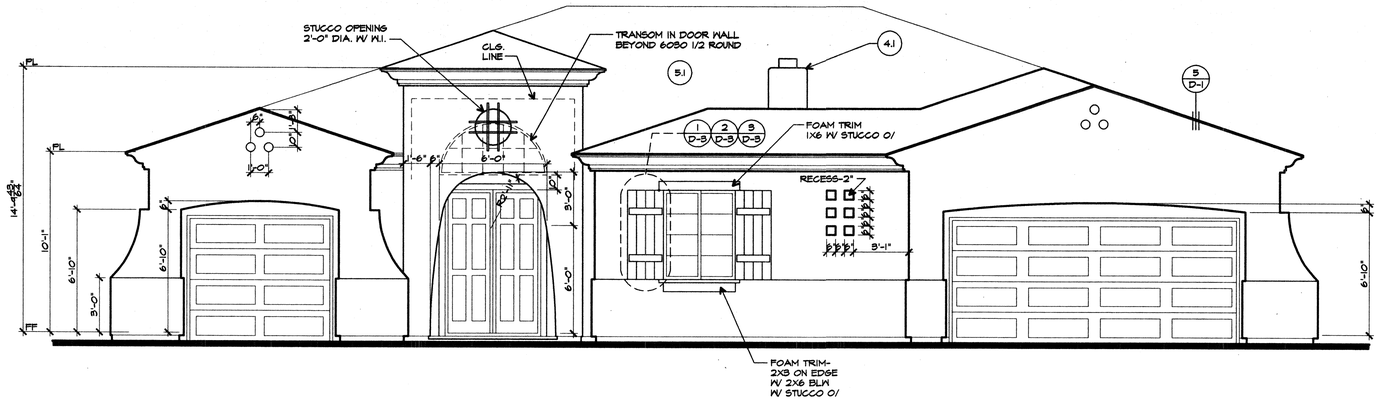

FRONT

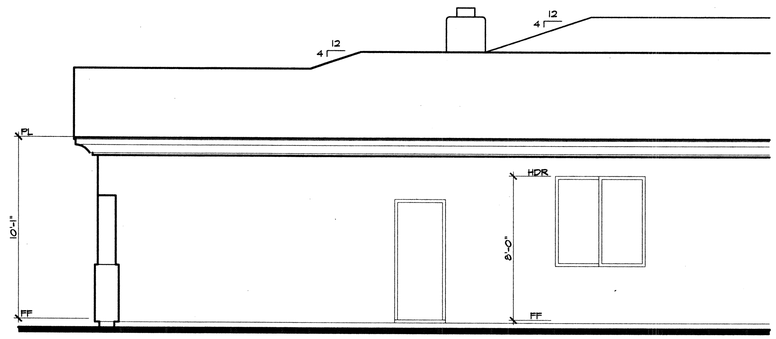

RIGHT

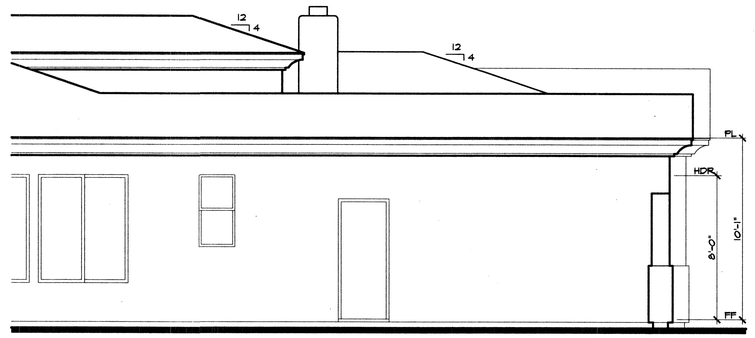

LEFT
SCALE: 1/4"=1'-0"

NOTE:
REFER TO THE FOLLOWING SHEETS FOR INFORMATION NOT SHOWN HERE.

FOUNDATION PROFILE	-SEE SHEET A-4.1
FLOOR PLAN	-SEE SHEET A-4.2 & A-4.3
ELECTRICAL PLAN	-SEE SHEET A-4.4 & A-4.5
ROOF PLAN	-SEE SHEET A-4.6
EXTERIOR ELEVATIONS	-SEE SHEET A-4.7
EXTERIOR ELEVATIONS	-SEE SHEET A-4.8

DANIELIAN ASSOCIATES
ARCHITECTURE & PLANNING
SIXTY CORPORATE PARK
IRVINE, CALIFORNIA 92606
(949) 474-6030
FAX: (949) 474-1422
WWW.DANIELIAN.COM

© DANIELIAN ASSOCIATES EXPRESSLY RESERVES ITS COMMON LAW COPYRIGHT AND OTHER PROPERTY RIGHTS IN THESE PLANS. THESE PLANS ARE NOT TO BE REPRODUCED CHANGED OR COPIED IN ANY FORM OR MANNER WHATSOEVER, NOR ARE THEY TO BE ASSIGNED TO ANY THIRD PARTY WITHOUT FIRST OBTAINING THE EXPRESSED WRITTEN PERMISSION AND CONSENT OF DANIELIAN ASSOCIATES.

REGISTERED PROFESSIONAL ARCHITECT
ARTHUR C. DANIELIAN
No. C-6526
STATE OF CALIFORNIA

NO.	DATE	REVISION

PROJECT TITLE
ARTISAN COLLECTION

PROJECT NO. 00052

SHEET TITLE
PLAN 4

EXTERIOR ELEVATIONS

'B' ELEV.

ORIGINAL DATE:
©
©
©
©

PRINT DATE

SHEET NO.
A-4.10

D:\MTEC\00052\Production\00052410.dwg Mon Feb 19 10:53:17 2001

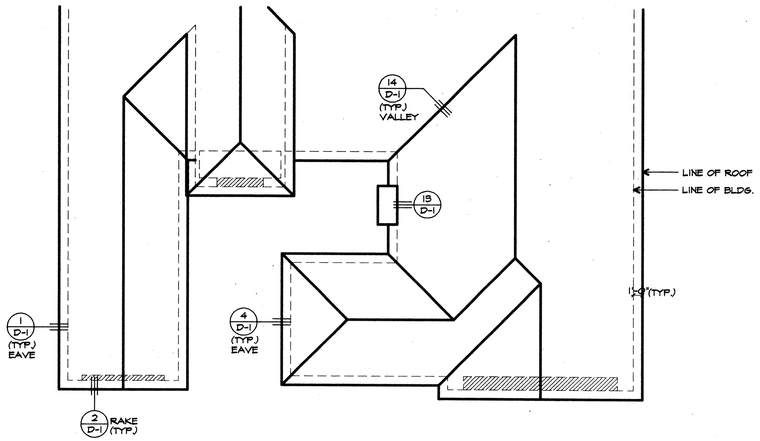

ROOF PLAN
SCALE: 1/8"=1'-0"

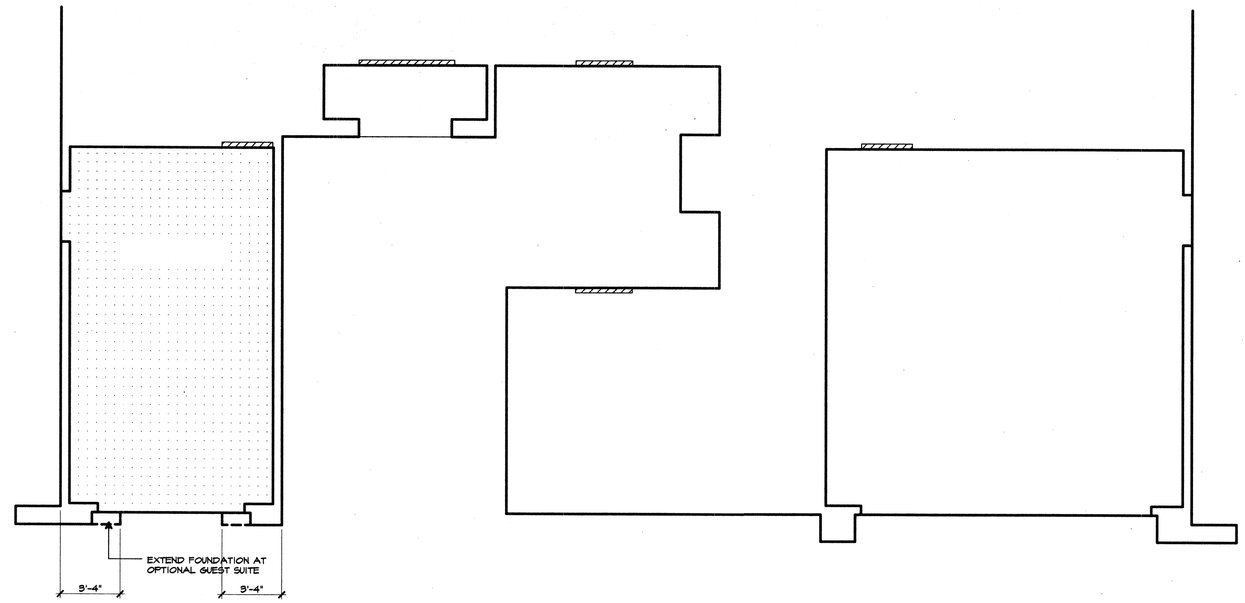

FOUNDATION PROFILE

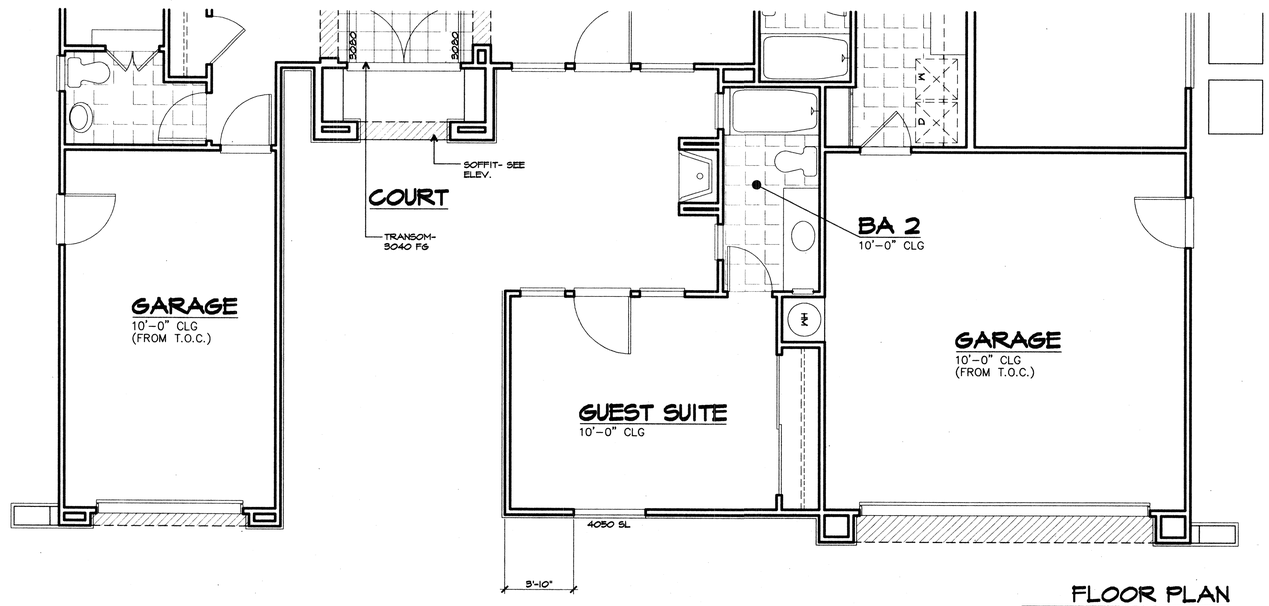

FLOOR PLAN
SCALE: 1/4"=1'-0"

NOTE:
REFER TO THE FOLLOWING SHEETS FOR INFORMATION NOT SHOWN HERE.

FOUNDATION PROFILE	-SEE SHEET A-4.1
FLOOR PLAN	-SEE SHEET A-4.2 & A-4.3
ELECTRICAL PLAN	-SEE SHEET A-4.4 & A-4.5
ROOF PLAN	-SEE SHEET A-4.6
EXTERIOR ELEVATIONS	-SEE SHEET A-4.7
EXTERIOR ELEVATIONS	-SEE SHEET A-4.8

DANIELIAN ASSOCIATES
ARCHITECTURE & PLANNING
SIXTY CORPORATE PARK
IRVINE, CALIFORNIA 92606
(949) 474-6030
FAX: (949) 474-1422
WWW.DANIELIAN.COM

© DANIELIAN ASSOCIATES EXPRESSLY RESERVES ITS COMMON LAW COPYRIGHT AND OTHER PROPERTY RIGHTS IN THESE PLANS. THESE PLANS ARE NOT TO BE REPRODUCED CHANGED OR COPIED IN ANY FORM OR MANNER WHATSOEVER, NOR ARE THEY TO BE ASSIGNED TO ANY THIRD PARTY WITHOUT FIRST OBTAINING THE EXPRESSED WRITTEN PERMISSION AND CONSENT OF DANIELIAN ASSOCIATES.

REGISTERED PROFESSIONAL ARCHITECT
ARTHUR C. DANIELIAN
No. C 4829
STATE OF CALIFORNIA

NO.	DATE	REVISION

PROJECT TITLE
ARTISAN COLLECTION

PROJECT NO. 00052

SHEET TITLE
PLAN 4
FLOOR PLAN/ ROOF PLAN
'C' ELEV.

ORIGINAL DATE:
PRINT DATE

SHEET NO. A-4.11

D:\ARTECT\00052\Production\00052411.dwg Mon Feb 19 10:54:15 2001

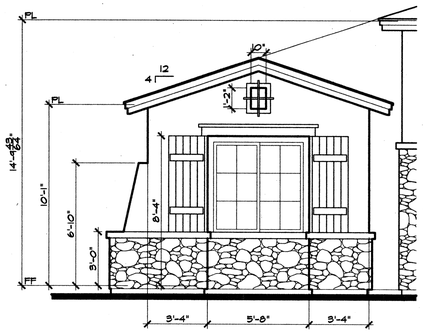

OPT. GUEST SUITE

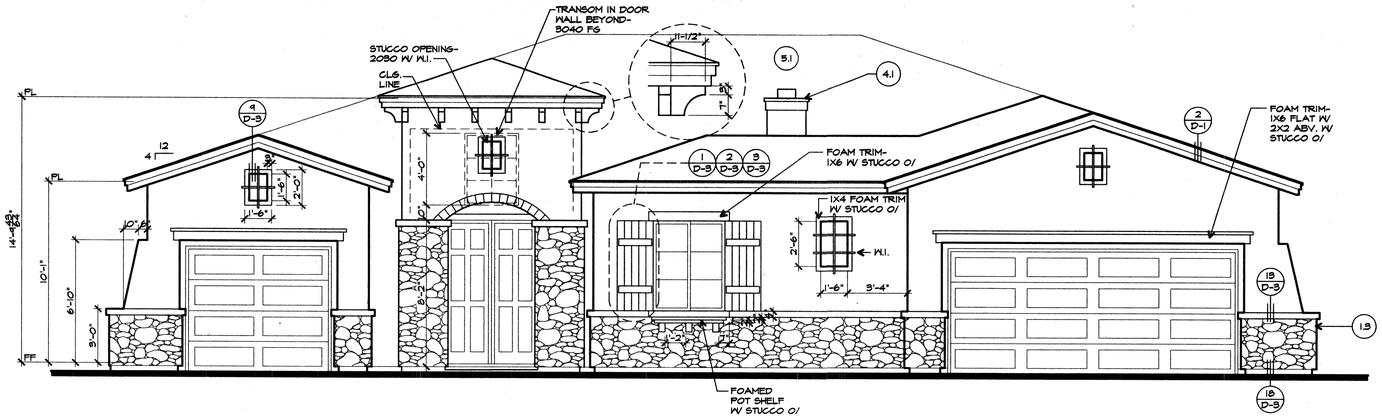

FRONT

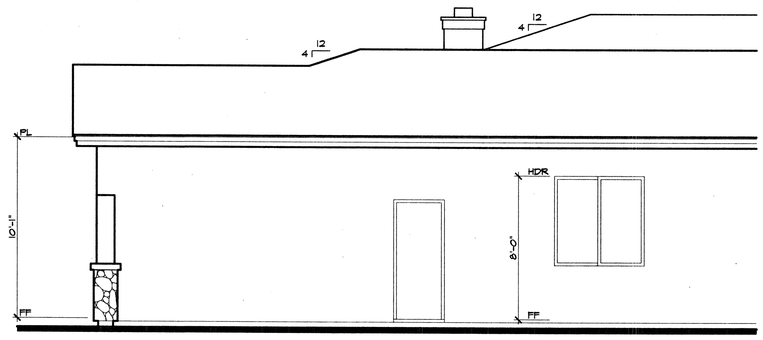

RIGHT

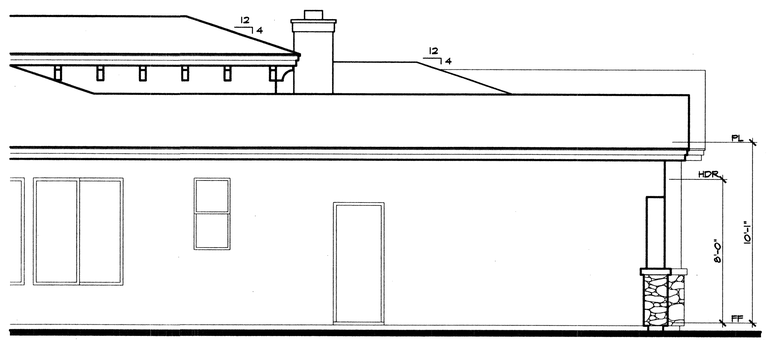

LEFT

SCALE: 1/4"=1'-0"

NOTE:
REFER TO THE FOLLOWING SHEETS FOR INFORMATION NOT SHOWN HERE.

FOUNDATION PROFILE	-SEE SHEET A-4.1
FLOOR PLAN	-SEE SHEET A-4.2 & A-4.3
ELECTRICAL PLAN	-SEE SHEET A-4.4 & A-4.5
ROOF PLAN	-SEE SHEET A-4.6
EXTERIOR ELEVATIONS	-SEE SHEET A-4.7
EXTERIOR ELEVATIONS	-SEE SHEET A-4.8

DANIELIAN ASSOCIATES
ARCHITECTURE & PLANNING
SIXTY CORPORATE PARK
IRVINE, CALIFORNIA 92606
(949) 474-6080
FAX: (949) 474-1422
WWW.DANIELIAN.COM

© DANIELIAN ASSOCIATES EXPRESSLY RESERVES ITS COMMON LAW COPYRIGHT AND OTHER PROPERTY RIGHTS IN THESE PLANS. THESE PLANS ARE NOT TO BE REPRODUCED CHANGED OR COPIED IN ANY FORM OR MANNER WHATSOEVER, NOR ARE THEY TO BE ASSIGNED TO ANY THIRD PARTY WITHOUT FIRST OBTAINING THE EXPRESSED WRITTEN PERMISSION AND CONSENT OF DANIELIAN ASSOCIATES.

REGISTERED PROFESSIONAL ARCHITECT
ARTHUR C. DANIELIAN
Reg. No. C 4829
STATE OF CALIFORNIA

NO.	DATE	REVISION

PROJECT TITLE
ARTISAN COLLECTION

PROJECT NO. 00052

SHEET TITLE
PLAN 4

EXTERIOR ELEVATIONS

'C' ELEV.

ORIGINAL DATE:
©
©
©
©

PRINT DATE

SHEET NO.
A-4.12

D:\MTEC\00052\Production\00052412.dwg Mon Feb 19 10:55:08 2001

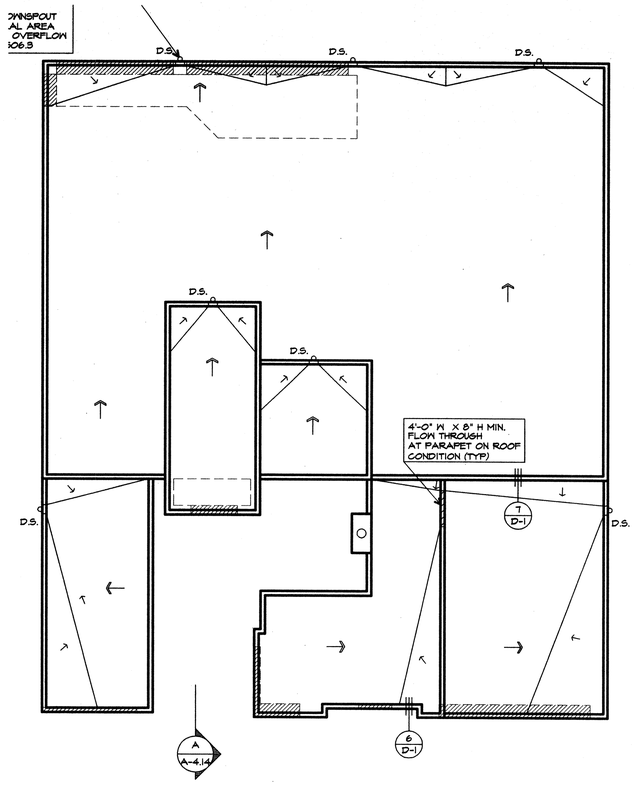

FLOOR PLAN
SCALE: 1/8"=1'-0"

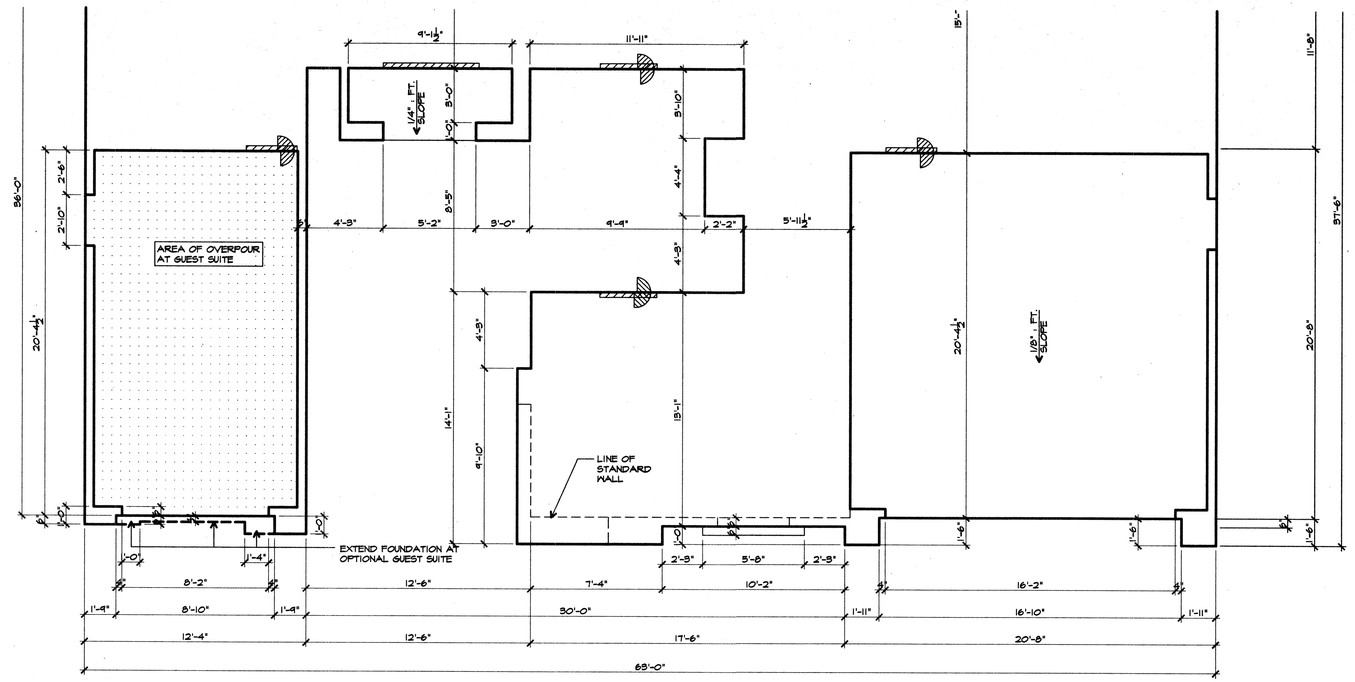

FOUNDATION

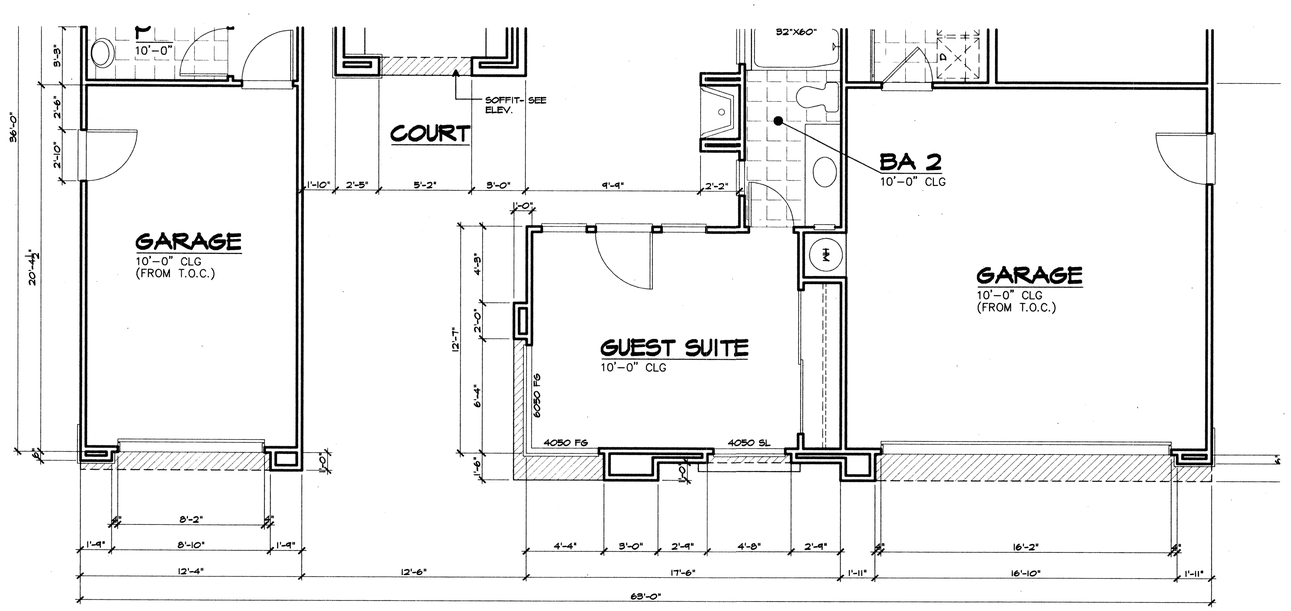

FLOOR PLAN
SCALE: 1/4"=1'-0"

NOTE:
REFER TO THE FOLLOWING SHEETS FOR
INFORMATION NOT SHOWN HERE.

FOUNDATION PROFILE	-SEE SHEET A-4.1
FLOOR PLAN	-SEE SHEET A-4.2 & A-4.3
ELECTRICAL PLAN	-SEE SHEET A-4.4 & A-4.5
ROOF PLAN	-SEE SHEET A-4.6
EXTERIOR ELEVATIONS	-SEE SHEET A-4.7
EXTERIOR ELEVATIONS	-SEE SHEET A-4.8

DANIELIAN ASSOCIATES
ARCHITECTURE & PLANNING
SIXTY CORPORATE PARK
IRVINE, CALIFORNIA 92606
(949) 474-6030
FAX. (949) 474-1422
WWW.DANIELIAN.COM

© DANIELIAN ASSOCIATES EXPRESSLY RESERVES ITS COMMON LAW COPYRIGHT AND OTHER PROPERTY RIGHTS IN THESE PLANS. THESE PLANS ARE NOT TO BE REPRODUCED CHANGED OR COPIED IN ANY FORM OR MANNER WHATSOEVER, NOR ARE THEY TO BE ASSIGNED TO ANY THIRD PARTY WITHOUT FIRST OBTAINING THE EXPRESSED WRITTEN PERMISSION AND CONSENT OF DANIELIAN ASSOCIATES.

REGISTERED PROFESSIONAL ARCHITECT
ARTHUR C. DANIELIAN
No. C 4829
STATE OF CALIFORNIA

NO.	DATE	REVISION

PROJECT TITLE
ARTISAN COLLECTION

PROJECT NO. 00052

SHEET TITLE
PLAN 4

FOUNDATION / FLOOR PLAN/ ROOF PLAN 'D' ELEV.

ORIGINAL DATE:
©
©
©
©

PRINT DATE

SHEET NO. A-4.13

D: \ATEC\00052\Production\00052413.dwg Mon Feb 19 10:56:14 2001

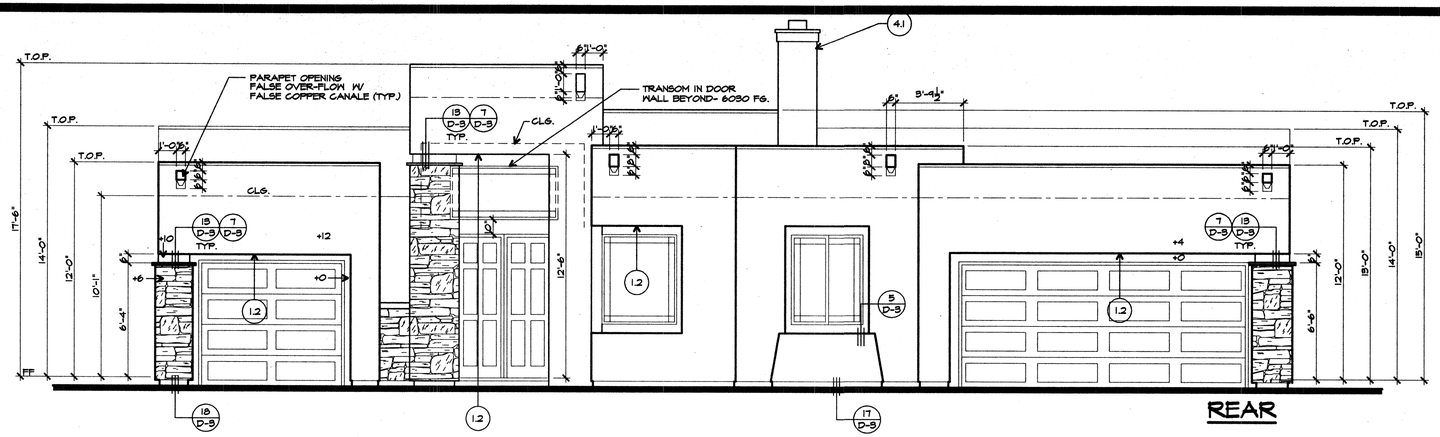

REAR

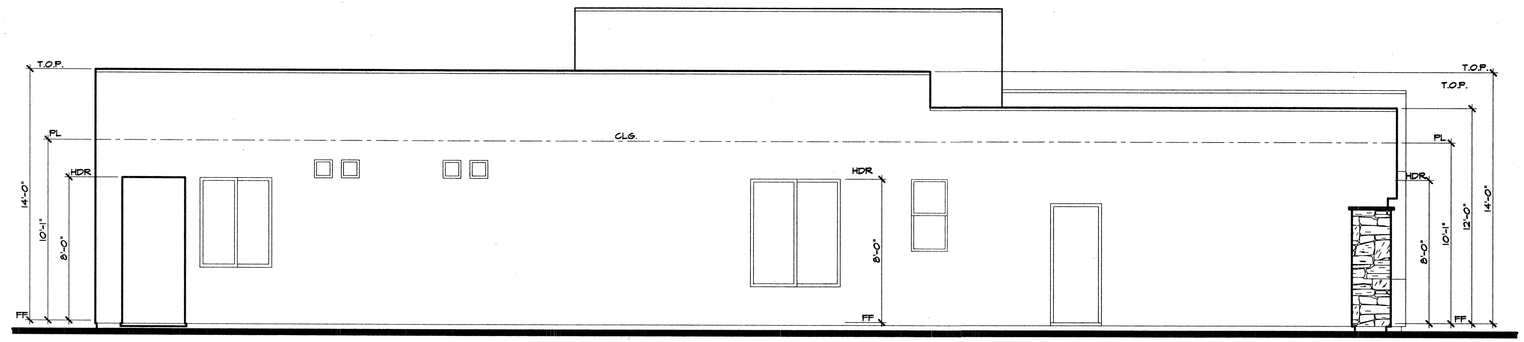

LEFT

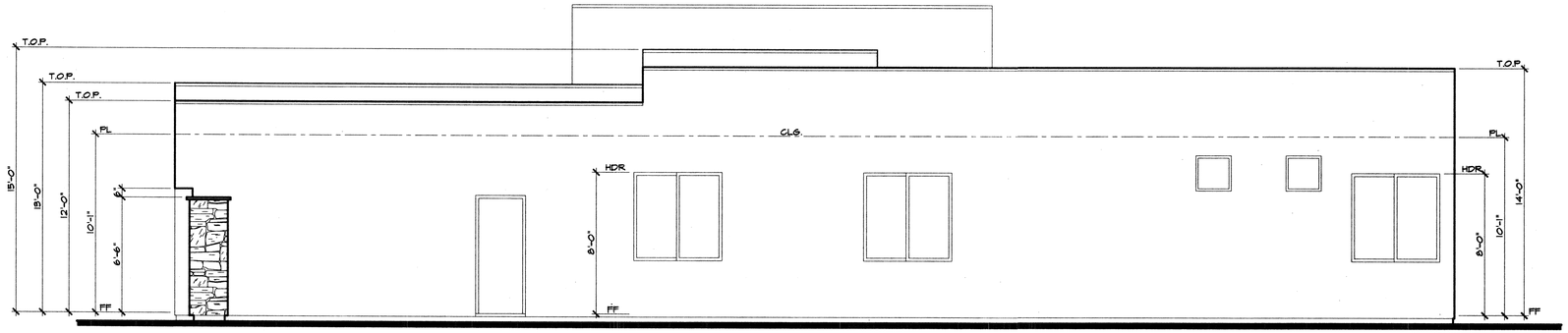

RIGHT

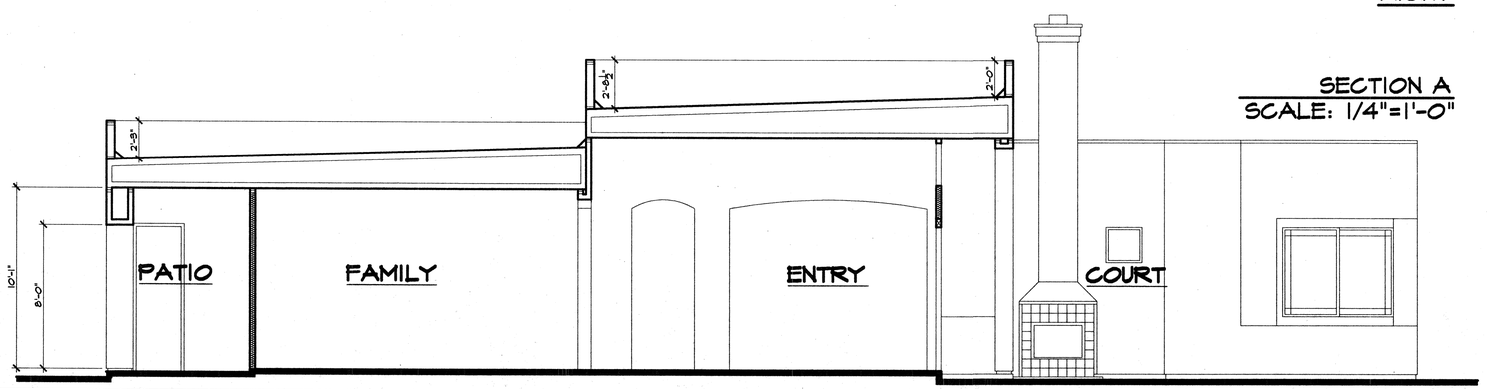

SECTION A
SCALE: 1/4"=1'-0"

NOTE:
REFER TO THE FOLLOWING SHEETS FOR INFORMATION NOT SHOWN HERE.

FOUNDATION PROFILE	-SEE SHEET A-4.1
FLOOR PLAN	-SEE SHEET A-4.2 & A-4.3
ELECTRICAL PLAN	-SEE SHEET A-4.4 & A-4.5
ROOF PLAN	-SEE SHEET A-4.6
EXTERIOR ELEVATIONS	-SEE SHEET A-4.7
EXTERIOR ELEVATIONS	-SEE SHEET A-4.8

DANIELIAN ASSOCIATES
ARCHITECTURE & PLANNING
SIXTY CORPORATE PARK
IRVINE, CALIFORNIA 92606
(949) 474-6030
FAX: (949) 474-1422
WWW.DANIELIAN.COM

© DANIELIAN ASSOCIATES EXPRESSLY RESERVES ITS COMMON LAW COPYRIGHT AND OTHER PROPERTY RIGHTS IN THESE PLANS. THESE PLANS ARE NOT TO BE REPRODUCED CHANGED OR COPIED IN ANY FORM OR MANNER WHATSOEVER, NOR ARE THEY TO BE ASSIGNED TO ANY THIRD PARTY WITHOUT FIRST OBTAINING THE EXPRESSED WRITTEN PERMISSION AND CONSENT OF DANIELIAN ASSOCIATES.

REGISTERED PROFESSIONAL ARCHITECT
ARTHUR C. DANIELIAN
Reg. No. C-6629
STATE OF CALIFORNIA

NO.	DATE	REVISION

PROJECT TITLE
ARTISAN COLLECTION

PROJECT NO. 00052

SHEET TITLE
PLAN 4

ELEVATIONS

'D' ELEV.

ORIGINAL DATE:
©
©
©
©

PRINT DATE

SHEET NO. A-4.14

J:\MTEC\00052\Production\00052414.dwg Mon Feb 19 10:57:08 2001

PROVIDE FIREBLOCKINGS AT FLOORS CEILING, ROOF AND BETWEEN ATTIC SPACE AND CHIMNEY PER UBC 708

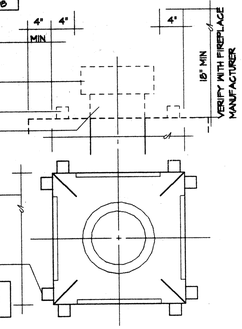

NOTE: ALL CHIMNEY COMPONENTS TO BE APPROVED BY FIREPLACE MANUFACTURER

16 CHIMNEY PROFILE CAP

CHIM-2 DA @ MMD

1" = 1'-0"

PROVIDE FIREBLOCKINGS AT FLOORS CEILING, ROOF AND BETWEEN ATTIC SPACE AND CHIMNEY PER UBC 708

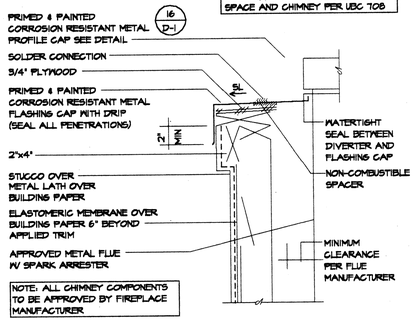

NOTE: ALL CHIMNEY COMPONENTS TO BE APPROVED BY FIREPLACE MANUFACTURER

17 CHIMNEY CAP

STUCCO ASSEMBLY W/ WRAPPED TRIM

CHIM-1 DA @ MMD

1 1/2" = 1'-0"

PROVIDE FIREBLOCKINGS AT FLOORS CEILING, ROOF AND BETWEEN ATTIC SPACE AND CHIMNEY PER UBC 708

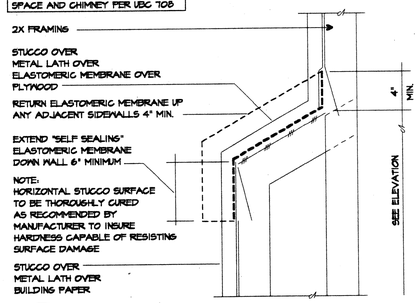

18 CHIMNEY SHOULDER

STUCCO ASSEMBLY

CHIM-1 DA @ MMD

1 1/2" = 1'-0"

19 NOT USED

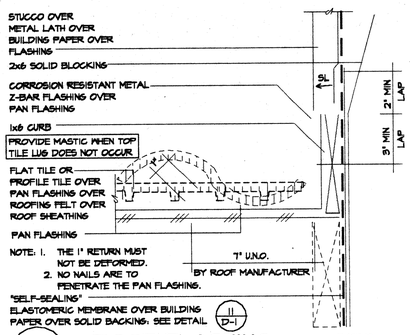

12 ROOF FLASHING

AT WALL W/ STUCCO ASSEMBLY

FLASH-10 DA @ MMD

3" = 1'-0"

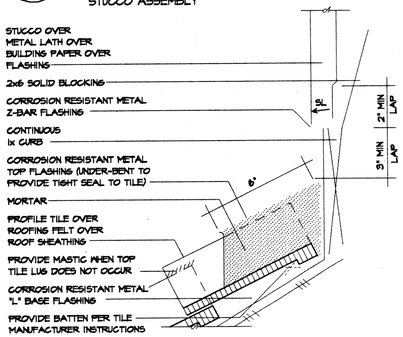

13 ROOF FLASHING

AT WALL STUCCO ASSEMBLY

FLASH-12 DA @ MMD

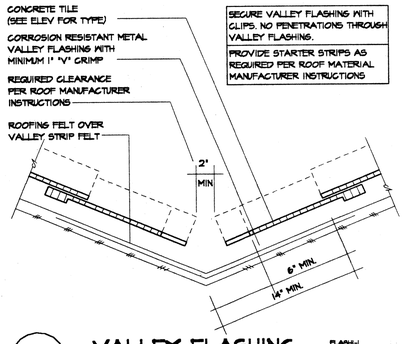

14 VALLEY FLASHING

FLASH-1 DA @ MMD

1 1/2" = 1'-0"

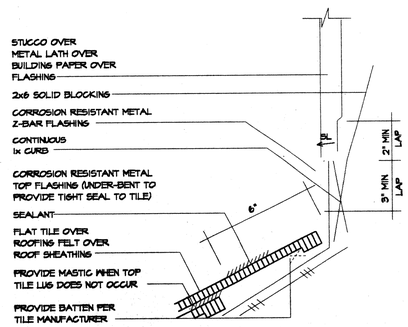

15 ROOF FLASHING

AT WALL STUCCO ASSEMBLY

FLASH-11 DA @ MMD

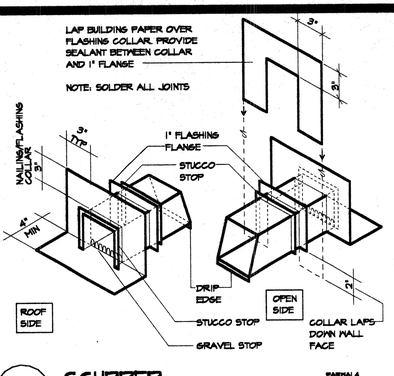

8 SCUPPER

PREFABRICATED CORROSION RESISTANT METAL

PARSKL4 DA @ MMD

1 1/2" = 1'-0"

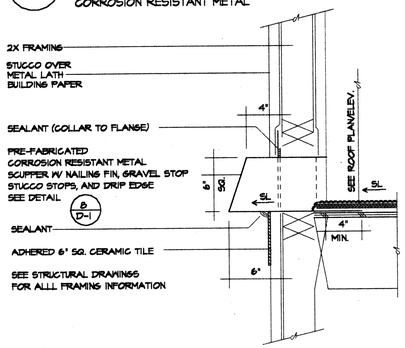

9 SCUPPER

AT ROOF PARAPET

PARSKL9 DA @ MMD

1 1/2" = 1'-0"

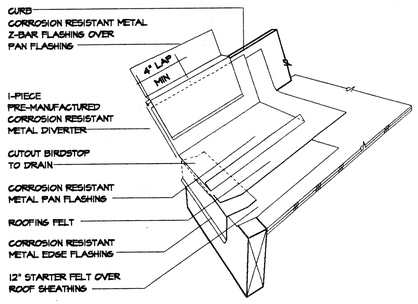

DIVERTER

FLASH-5 DA @ MMD

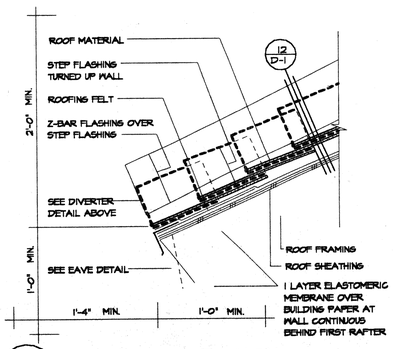

11 WALL PROTECTION

AT ROOF TERMINATION

FLASH-5 DA @ MMD

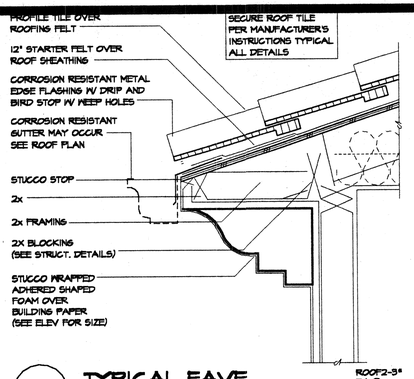

4 TYPICAL EAVE

AT ELEVATION "B"

ROOF2-3* DA @ MMD

1/2" = 1'-0"

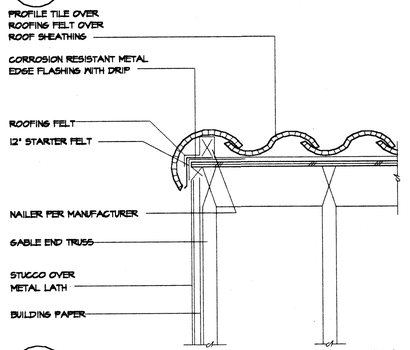

5 TIGHT RAKE

AT ELEVATION "B"

ROOF2-4 DA @ MMD

1/2" = 1'-0"

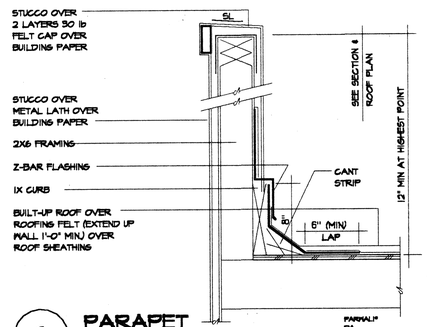

6 PARAPET

AT STUD WALL AT ELEVATION "D"

PARVAL1* DA

1/2" = 1'-0"

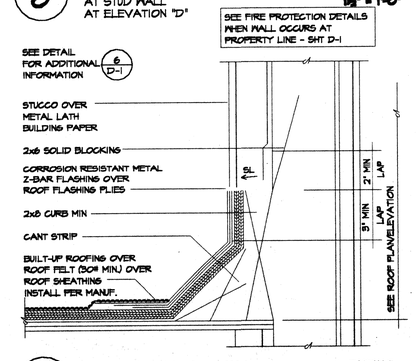

7 ROOF FLASHING

BUILT-UP ROOF AT WALL

PARVAL2 DA @ MMD

USE OF THE ARCHITECTURAL DETAILS

THE DETAILS SHOWN ARE INTENDED TO FURTHER ILLUSTRATE THE VISUAL DESIGN CONCEPT AND THE MINIMUM RECOMMENDED WEATHER PROTECTION FOR THIS PROJECT.

THE GENERAL CONTRACTOR SHALL INCORPORATE THE REQUIREMENTS OF THE BUILDING CODE, STRUCTURAL CONSIDERATIONS, TRADE ASSOCIATION MANUALS AND PUBLICATIONS, AND PRODUCT MANUFACTURERS WRITTEN INSTRUCTIONS FOR THE COMPLETE CONSTRUCTION OF THE DETAILS.

ALL POSSIBLE FIELD CONDITIONS WHICH MAY BE ENCOUNTERED ARE NOT NECESSARILY DESCRIBED. FIELD CONDITIONS ENCOUNTERED WHICH REQUIRE CLARIFICATION SHALL BE BROUGHT TO THE ATTENTION OF THE ARCHITECT IN A TIMELY MANNER.

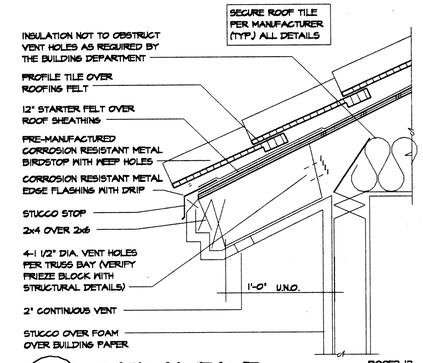

1 TYPICAL EAVE

AT ELEVATION "C"

ROOF2-12 DA @

1/2" = 1'-0"

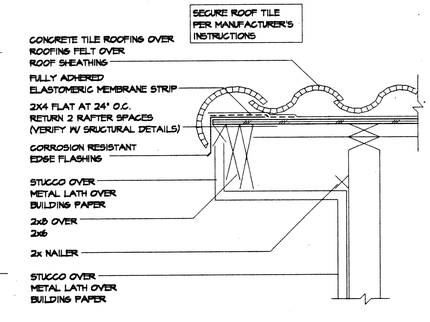

2 TYPICAL RAKE

AT ELEVATION "C"

ROOF3-13 DA @

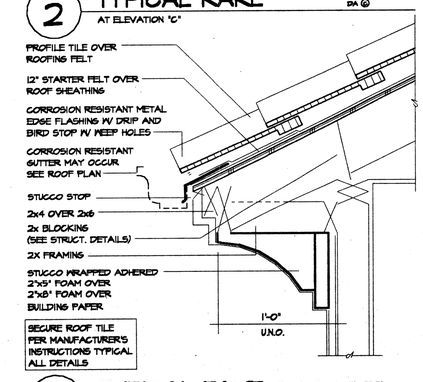

3 TYPICAL EAVE

AT ELEVATION "A"

ROOF3-9* DA @ MMD

DANIELIAN ASSOCIATES
ARCHITECTURE & PLANNING

SIXTY CORPORATE PARK
IRVINE, CALIFORNIA 92606
(949) 474-6030
FAX: (949) 474-1422

© DANIELIAN ASSOCIATES EXPRESSLY RESERVES ITS COMMON LAW COPYRIGHT AND OTHER PROPERTY RIGHTS IN THESE PLANS. THESE PLANS ARE NOT TO BE REPRODUCED CHANGED OR COPIED IN ANY FORM OR MANNER WHATSOEVER, NOR ARE THEY TO BE ASSIGNED TO ANY THIRD PARTY WITHOUT FIRST OBTAINING THE EXPRESSED WRITTEN PERMISSION AND CONSENT OF DANIELIAN ASSOCIATES.

REGISTERED PROFESSIONAL ARCHITECT — ARTHUR C. DANIELIAN — REG. No. C 4829 — STATE OF CALIFORNIA

NO.	DATE	REVISION

PROJECT TITLE

ARTISAN COLLECTION

PROJECT NO. 00052

SHEET TITLE

ARCH DETAILS

ORIGINAL DATE

©

©

©

©

PRINT DATE: 2-19-2001
PRINT TIME: 1:21 PM

SHEET NO. D-1

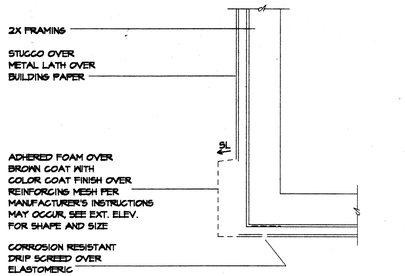

17 **SOFFIT** — SOFF2CS DA @ MR6

STUCCO ASSEMBLY
W/ WRAPPED FOAM TRIM

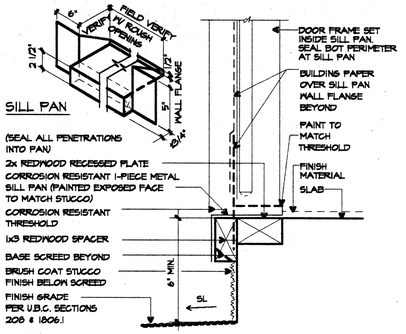

13 **THRESHOLD** — MDP6-8 DA @ MR7

STUCCO ASSEMBLY- IN SW DR

3" = 1'-0"

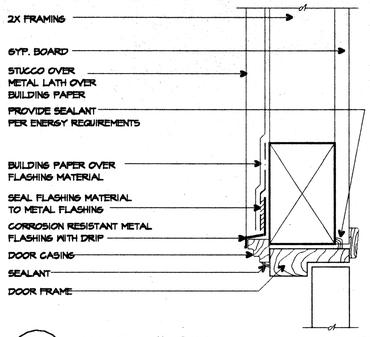

9 **DOOR HEAD** — MDP6-6 DA @ MR7

STUCCO ASSEMBLY
SW DR - NO TRIM

3" = 1'-0"

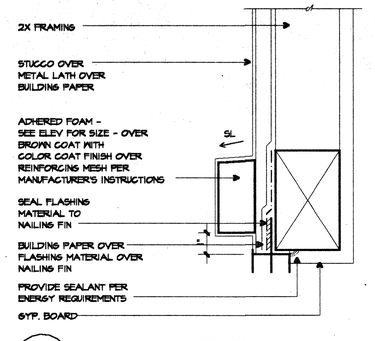

5 **WINDOW HEAD** — MDP6-1 DA @ MR7

STUCCO ASSEMBLY
W/ WRAPPED FOAM TRIM

3" = 1'-0"

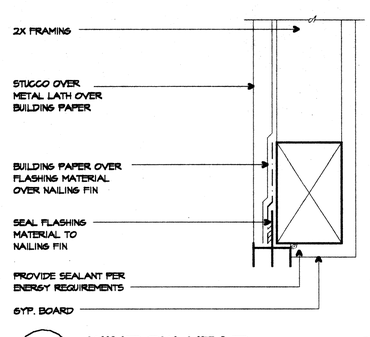

1 **WINDOW HEAD** — MDP6-1 DA @ MR7

STUCCO ASSEMBLY
NO TRIM

3" = 1'-0"

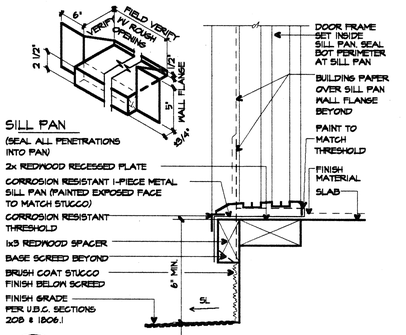

14 **THRESHOLD** — MDP6-9 DA @ MR7

STUCCO ASSEMBLY- SL DR

3" = 1'-0"

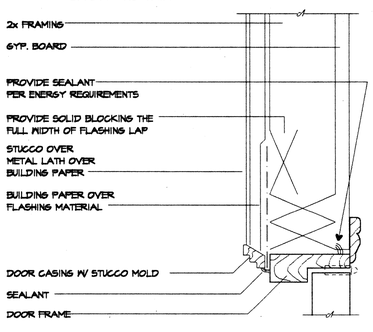

10 **DOOR JAMB** — MDP6-7 DA @ MR7

STUCCO ASSEMBLY
NO TRIM

3" = 1'-0"

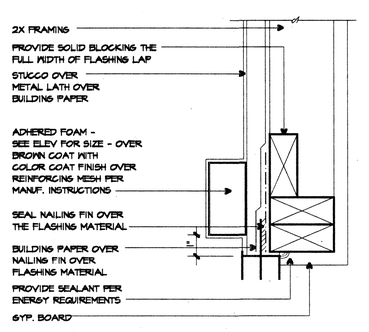

6 **WINDOW JAMB** — MDP6-2 DA @ MR7

STUCCO ASSEMBLY
W/ WRAPPED FOAM TRIM

3" = 1'-0"

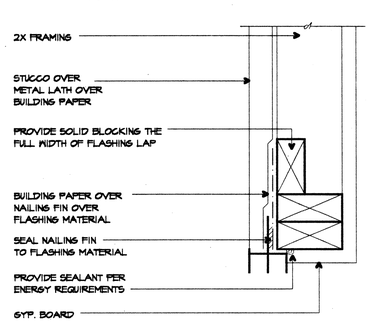

2 **WINDOW JAMB** — MDP6-2 DA @ MR7

STUCCO ASSEMBLY
NO TRIM

3" = 1'-0"

18

19

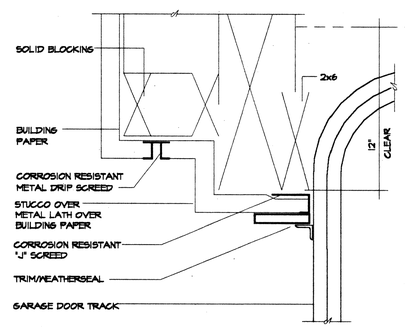

15 **GARAGE DOOR HEAD** — GARSECA DA @ MR7

STUCCO ASSEMBLY
AT SECTIONAL DOOR

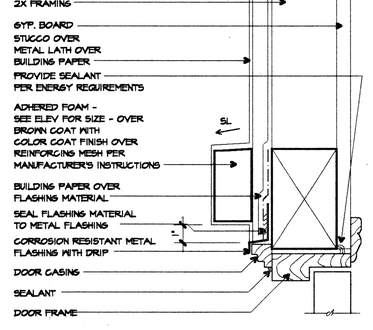

11 **DOOR HEAD** — MDP6-6 DA @ MR7

STUCCO ASSEMBLY
W/ WRAPPED FOAM TRIM

3" = 1'-0"

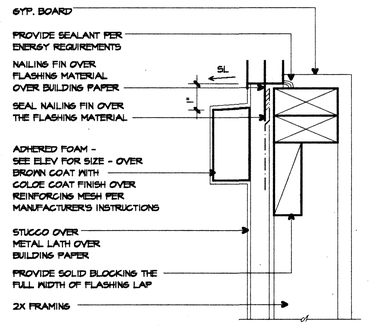

7 **WINDOW SILL** — MDP6-3 DA @ MR7

STUCCO ASSEMBLY
W/ WRAPPED FOAM TRIM

3" = 1'-0"

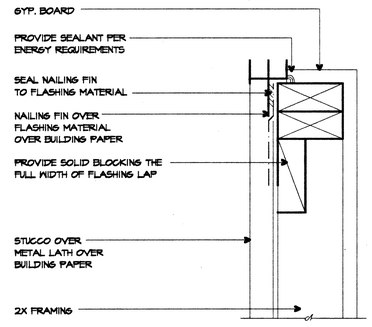

3 **WINDOW SILL** — MDP6-3 DA @ MR7

STUCCO ASSEMBLY
NO TRIM

3" = 1'-0"

20

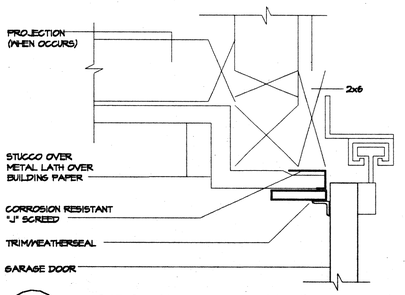

16 **GARAGE DOOR JAMB** — GARSECB DA @ MR7

STUCCO ASSEMBLY
AT SECTIONAL DOOR

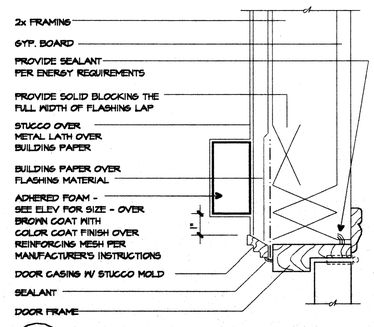

12 **DOOR JAMB** — MDP6-7 DA @ MR7

STUCCO ASSEMBLY
W/ WRAPPED FOAM TRIM

3" = 1'-0"

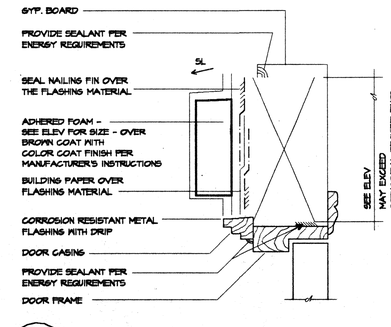

8 **WINDOW O/ DR HEAD** — MDP6-9 DA @ MR7

STUCCO ASSEMBLY
W/ WRAPPED FOAM TRIM

4 **NOT USED**

DANIELIAN ASSOCIATES
ARCHITECTURE & PLANNING

SIXTY CORPORATE PARK
IRVINE, CALIFORNIA 92606
(949) 474-6030
FAX: (949) 474-1422

© DANIELIAN ASSOCIATES EXPRESSLY RESERVES ITS COMMON LAW COPYRIGHT AND OTHER PROPERTY RIGHTS IN THESE PLANS. THESE PLANS ARE NOT TO BE REPRODUCED CHANGED OR COPIED IN ANY FORM OR MANNER WHATSOEVER, NOR ARE THEY TO BE ASSIGNED TO ANY THIRD PARTY WITHOUT FIRST OBTAINING THE EXPRESSED WRITTEN PERMISSION AND CONSENT OF DANIELIAN ASSOCIATES.

REGISTERED PROFESSIONAL ARCHITECT — ARTHUR C. DANIELIAN — Reg. No. C 4829

NO.	DATE	REVISION

PROJECT TITLE
ARTISAN COLLECTION

PROJECT NO. 00052

SHEET TITLE
ARCH DETAILS

ORIGINAL DATE
©
©
©
©

PRINT DATE: 2-19-2001
PRINT TIME: 1:19 PM

SHEET NO. **D-2**

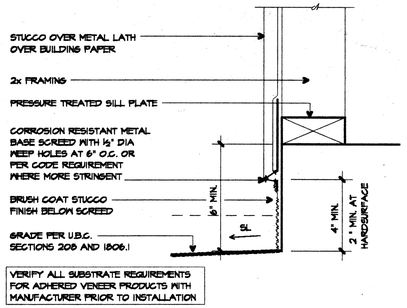

VERIFY ALL SUBSTRATE REQUIREMENTS FOR ADHERED VENEER PRODUCTS WITH MANUFACTURER PRIOR TO INSTALLATION

17 BASE DETAIL

STUCCO ASSEMBLY

BASE-1 DA @ MM1

3" = 1'-0"

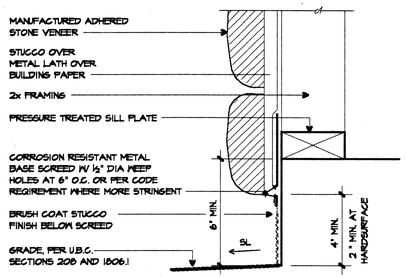

VERIFY ALL SUBSTRATE REQUIREMENTS FOR ADHERED VENEER PRODUCTS WITH MANUFACTURER PRIOR TO INSTALLATION

18 BASE DETAIL

STUCCO ASSEMBLY

BASE1-7 DA @ MM1

3" = 1'-0"

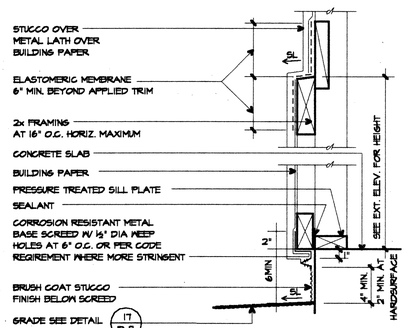

19 1½" PROJECTED BASE

STUCCO ASSEMBLY

BASE1-2 DA @ MM1

1" = 1'-0"

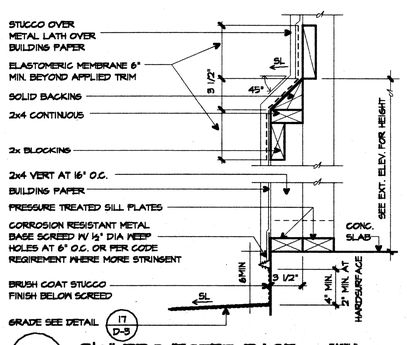

20 3½" PROJECTED BASE

STUCCO ASSEMBLY

BASE1-3 DA @ MM1

1 1/2" = 1'-0"

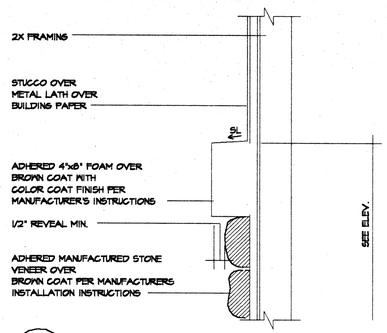

13 MATERIAL TRANSITION

STUCCO ASSEMBLY
ADHERED VENEER

MAT1-3 DA @

3" = 1'-0"

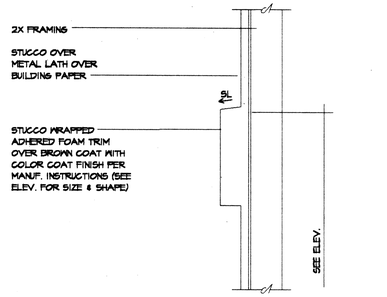

14 HORIZONTAL TRIM

STUCCO ASSEMBLY
W/ WRAPPED FOAM TRIM

TRIM-11 DA @ MM1

1½" = 1'-0"

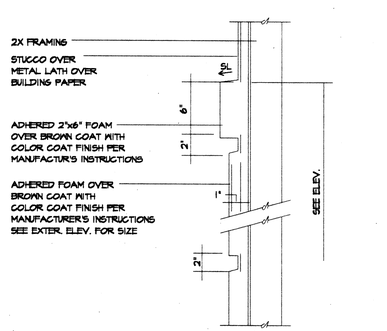

15 HORIZONTAL TRIM

STUCCO ASSEMBLY
W/ WRAPPED FOAM TRIM

TRIM-11 DA @

1½" = 1'-0"

16 NOT USED

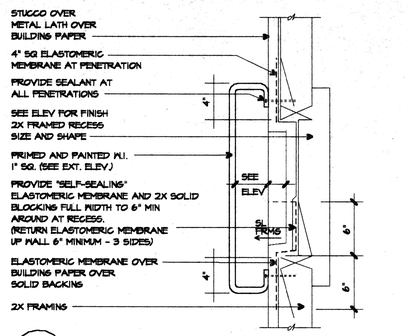

9 STUCCO RECESS

STUCCO ASSEMBLY
W/ WROUGHT IRON

RECESS1 DA @ MM3

1 1/2" = 1'-0"

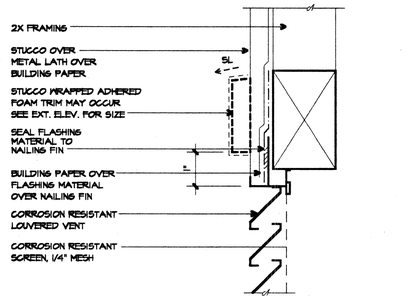

HEAD AT VENT

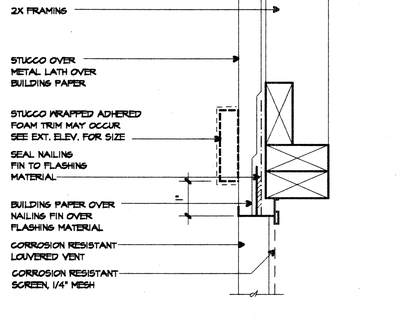

JAMB AT VENT

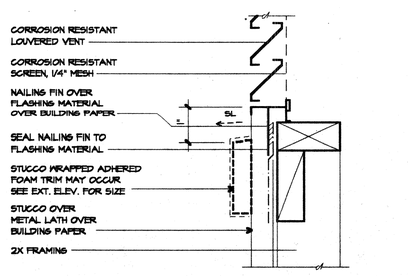

12 SILL AT VENT

STUCCO ASSEMBLY
WRAPPED FOAM TRIM MAY OCCUR

VENT3C3 DA @ MM1

3"=1'-0"

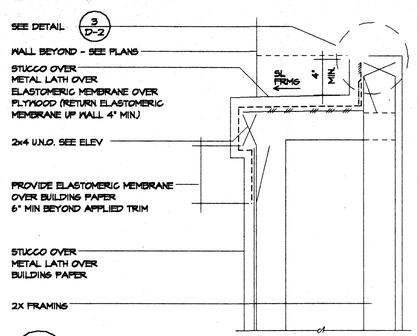

5 POTSHELF

STUCCO ASSEMBLY
AT WINDOW

PSH-2 DA @ MM3

1 1/2" = 1'-0"

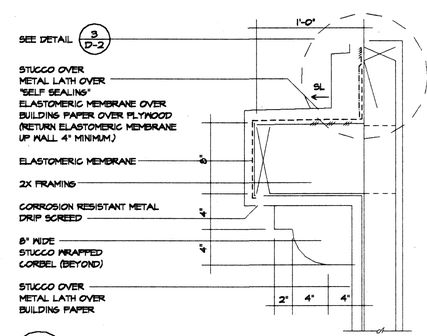

6 POTSHELF

STUCCO ASSEMBLY
AT WINDOW

PSH-6 DA @

1 1/2" = 1'-0"

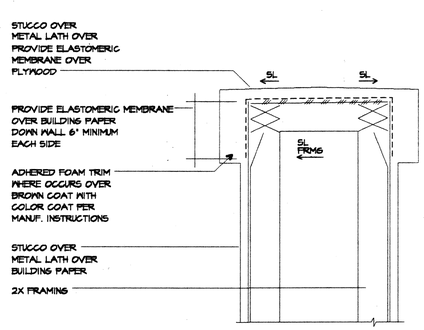

7 EXTERIOR LOW WALL

STUCCO ASSEMBLY

PSH-3 DA @

1 1/2" = 1'-0"

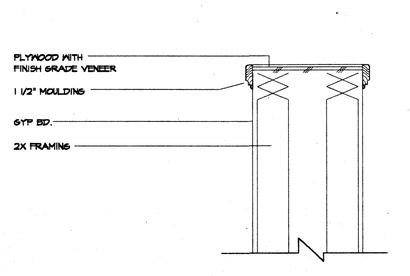

8 LOW WALL

WIDER THAN 12" - INTERIOR

PSH-7 DA @

1 1/2"=1'-0"

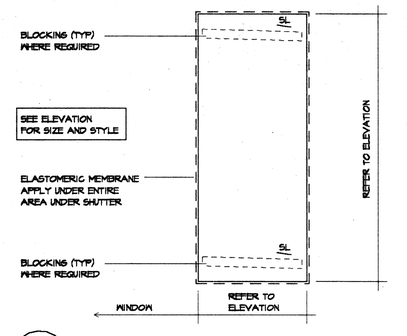

1 SHUTTER

SHTR-9 DA @ MM3

1" = 1'-0"

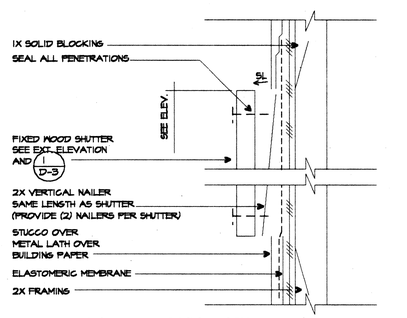

2 WOOD SHUTTER ATTACHMENT

STUCCO ASSEMBLY

SHTR3-0 DA @ MM3

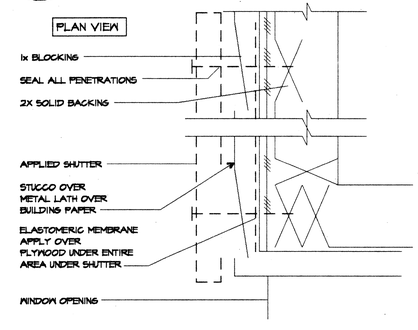

3 APPLIED SHUTTER

AT WINDOW JAMB WITH PROJECTION

NOTE: ALL METAL TO BE PROTECTED TO PREVENT CORROSION.

SHTR3A DA @ MM3

3" = 1'-0"

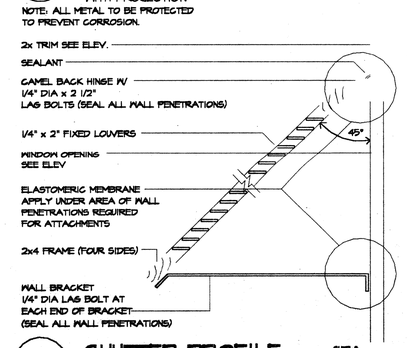

4 SHUTTER PROFILE

SHTR-8 DA @ MM3

1 1/2" = 1'-0"

DANIELIAN ASSOCIATES
ARCHITECTURE & PLANNING

SIXTY CORPORATE PARK
IRVINE, CALIFORNIA 92606
(949) 474-6030
FAX: (949) 474-1422

© DANIELIAN ASSOCIATES EXPRESSLY RESERVES ITS COMMON LAW COPYRIGHT AND OTHER PROPERTY RIGHTS IN THESE PLANS. THESE PLANS ARE NOT TO BE REPRODUCED CHANGED OR COPIED IN ANY FORM OR MANNER WHATSOEVER, NOR ARE THEY TO BE ASSIGNED TO ANY THIRD PARTY WITHOUT FIRST OBTAINING THE EXPRESSED WRITTEN PERMISSION AND CONSENT OF DANIELIAN ASSOCIATES.

REGISTERED PROFESSIONAL ARCHITECT
ARTHUR C. DANIELIAN
No. C 4829
STATE OF CALIFORNIA

NO.	DATE	REVISION

PROJECT TITLE
ARTISAN COLLECTION

PROJECT NO. 00052

SHEET TITLE
ARCH DETAILS

ORIGINAL DATE
©
©
©
©

PRINT DATE: 2-19-2001
PRINT TIME: 1:22 PM

SHEET NO. **D-3**

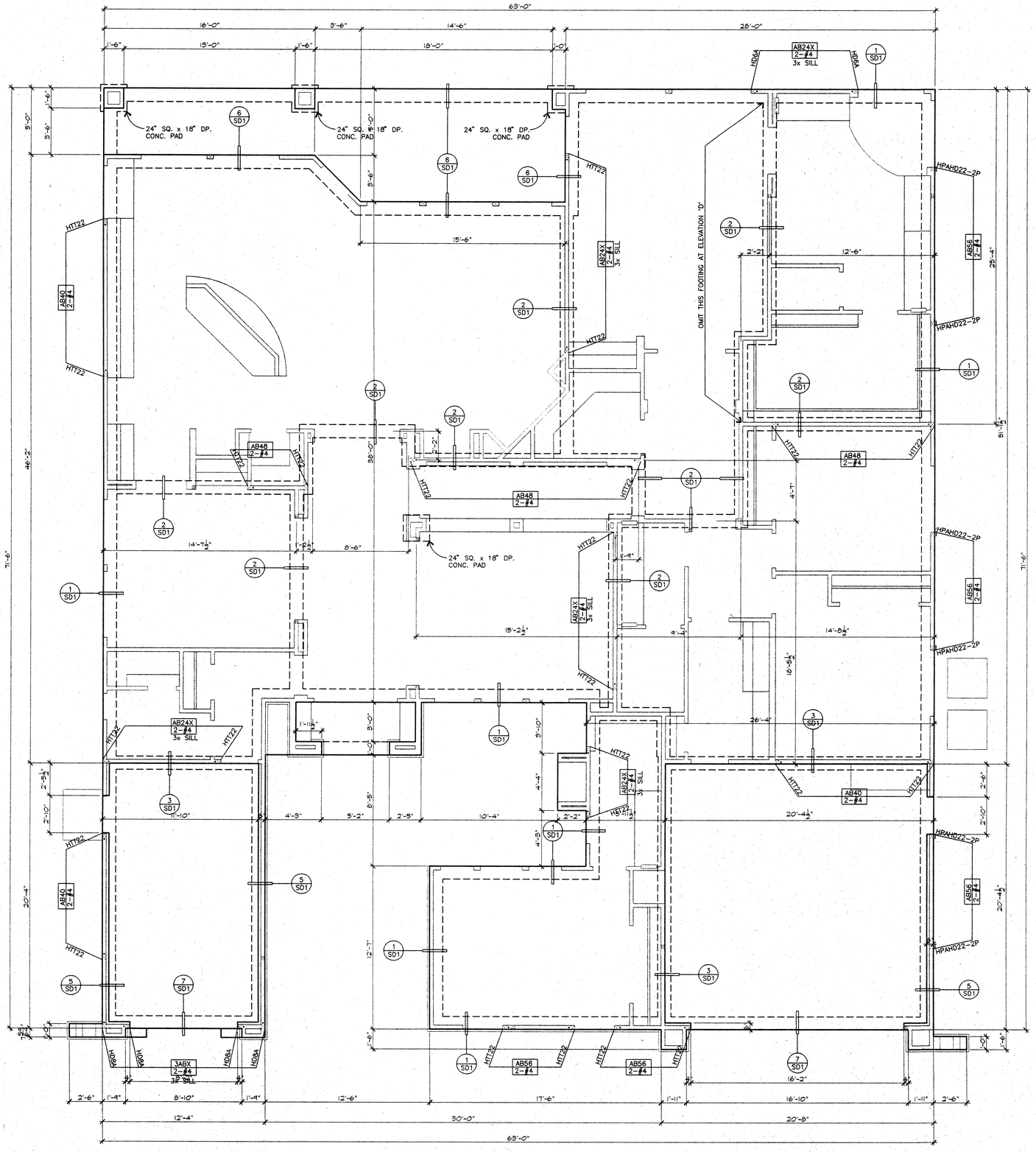

FOUNDATION PLAN 4

SCALE : 1/4" = 1'-0"

FOUNDATION NOTES:

ALL DIMENSIONS SHALL BE VERIFIED WITH THE ARCHITECTS DRAWINGS ANY DISCREPANCIES SHALL BE RESOLVED PRIOR TO COMMENCING OF WORK.

1. ALL EXTERIOR WALLS ARE TO BE SECURED WITH 5/8" DIAMETER BY 10" LONG ANCHOR BOLTS EMBEDDED AT LEAST 7" INTO CONCRETE WITH A MAXIMUM SPACING OF 72" O.C. THERE SHALL BE A MINIMUM OF TWO BOLTS PER PIECE OF FOUNDATION PLATE WITH ONE BOLT LOCATED WITHIN 12" OF EA. END OF EA. PIECE. A PROPERLY SIZED NUT AND WASHER SHALL BE TIGHTENED ON EA. BOLT TO THE PLATE.
2. ALL SHEAR WALLS ARE TO BE SECURED WITH ANCHOR BOLTS SPACED PER FOUNDATION PLAN
3. ALL INTERIOR NON-SHEAR WALLS ARE TO BE SECURED WITH SHOT PINS INSTALLED PER MANUFACTURERS RECOMMENDATIONS, U.N.O. STRUCTURAL ENGINEERS CALCULATIONS GOVERN IN ALL CASES.
4. INSTALL ALL SIMPSON (OR APPROVED EQUAL) FOUNDATION HARDWARE PER MANUFACTURERS RECOMMENDATIONS. DEEPEN FOOTING WHERE NECESSARY TO PROVIDE ANCHOR EMBEDMENT AT HOLDOWN LOCATIONS.
5. PROVIDE 5/8" DIAMETER BY 12" ANCHOR BOLTS AT 3X FOUNDATION PLATES WHERE OCCURS. VERIFY WITH FRAMING PLANS.
6. 2" x 2" x 3/16" STEEL PLATE WASHERS ARE REQUIRED ON EACH ANCHOR BOLT (UBC SECT. 1806.6.1)

SOIL INFORMATION:

1. FOUNDATION SIZES, DEPTHS, AND REINFORCEMENT ARE AS RECOMMENDED WITHIN THE OWNER/DEVELOPER'S SOILS ENGINEERS REPORT.
2. OWNER/DEVELOPER AND SUBCONTRACTORS ARE TO REVIEW THE SOILS REPORT PRIOR TO COMMENCING CONSTRUCTION. IT IS THE RESPONSIBILITY OF THE OWNER, DEVELOPER AND SUBCONTRACTOR TO VERIFY THAT THE REPORT DATE ABOVE IS CURRENT AND PLAN REQUIREMENTS ARE CONSISTENT WITH ANY UPDATED SOIL REPORTS.

NON-SHADED FTG. INDICATES 12" WIDE x 12" DEEP FTG. w/ (1)#4 TOP & BOTTOM CONT.

SHADED FTG. INDICATES 15" WIDE x 18" DEEP FTG. w/ (1)#4 TOP & BOTTOM CONT.

HATCHED FTG. INDICATES GRADE BM

ANCHOR BOLTING:

AB64 : 5/8" DIA. X 10" ANCHOR BOLTS AT 64" O.C.
AB56 : 5/8" DIA. X 10" ANCHOR BOLTS AT 56" O.C.
AB48 : 5/8" DIA. X 10" ANCHOR BOLTS AT 48" O.C.
AB40 : 5/8" DIA. X 10" ANCHOR BOLTS AT 40" O.C.
AB32 : 5/8" DIA. X 10" ANCHOR BOLTS AT 32" O.C.
AB24 : 5/8" DIA. X 10" ANCHOR BOLTS AT 24" O.C.
AB16 : 5/8" DIA. X 10" ANCHOR BOLTS AT 16" O.C.
AB 8 : 5/8" DIA. X 10" ANCHOR BOLTS AT 8" O.C.
AB48X : 5/8" DIA. X 12" ANCHOR BOLTS AT 48" O.C.
AB32X : 5/8" DIA. X 12" ANCHOR BOLTS AT 32" O.C.
AB24X : 5/8" DIA. X 12" ANCHOR BOLTS AT 24" O.C.
AB16X : 5/8" DIA. X 12" ANCHOR BOLTS AT 16" O.C.
AB 8X : 5/8" DIA. X 12" ANCHOR BOLTS AT 8" O.C.
2AB : (2) 5/8" DIA X 10" ANCHOR BOLTS.
3AB : (3) 5/8" DIA. x 10" ANCHOR BOLTS.
2ABX : (2) 5/8" DIA X 12" ANCHOR BOLTS.
3ABX : (3) 5/8" DIA X 12" ANCHOR BOLTS.
2ABXX : (2) 3/4"DIA X 12" ANCHOR BOLTS.
3ABXX : (3) 3/4"DIA X 12" ANCHOR BOLTS.

2-#4 : PROVIDE A TOTAL OF 2 #4 AT TOP AND 2 #4 AT BOTTOM OF FOOTING, 3" PAST POSTS.
3-#4 : PROVIDE A TOTAL OF 3 #4 AT TOP AND 3 #4 AT BOTTOM OF FOOTING, 3" PAST POSTS.
4-#4 : PROVIDE A TOTAL OF 4 #4 AT TOP AND 4 #4 AT BOTTOM OF FOOTING, 3" PAST POSTS.

HD2A : (1) SIMPSON HD2A PER POST.
HD5A : (1) SIMPSON HD5A PER POST.
HD6A : (1) SIMPSON HD6A PER POST.
HD8A : (1) SIMPSON HD8A PER POST.
HD10A : (1) SIMPSON HD10A PER POST.
HD14A : (1) SIMPSON HD14A PER POST.
HD20A : (1) SIMPSON HD20A PER POST.
HPA : (1) SIMPSON HPAHD22 PER POST.
HPAHD22-2P : (1) SIMPSON HPAHD22-2P PER POST.
2HPA : (2) SIMPSON HPAHD22 PER POST.
MIT28B : (1) SIMPSON MIT28B PER POST.
HIT16 : (1) SIMPSON HIT16 PER POST.
LTT19 : (1) SIMPSON LTT19 PER POST.
HIT22 : (1) SIMPSON HIT22 PER POST.

REVISIONS	BY

ESI/FME, INC.
STRUCTURAL ENGINEERS
1800 E. 16TH STREET
SANTA ANA, CA 92701
PHONE: 714-835-2800
FAX: 714-835-2819

JN-2459 11/30/00

PROFESSIONAL ENGINEER * STATE OF CALIFORNIA * STRUCTURAL * RICHARD K. FORD * EXP. 12-31-01

THE ARTISAN COLLECTION

CATHEDRAL CITY, CALIFORNIA
FORD-DA VALL GROUP, LLC

DRAWN	
CHECKED	
DATE	DEC. 8, 2000
JOB NO.	2459
SHEET	S4-1
SHEET:	OF:

FEB 28 2001

AutoCAD File: J:\files\2459\2459S41.dwg Plotted at: Mon Feb 26 13:23:53 2001

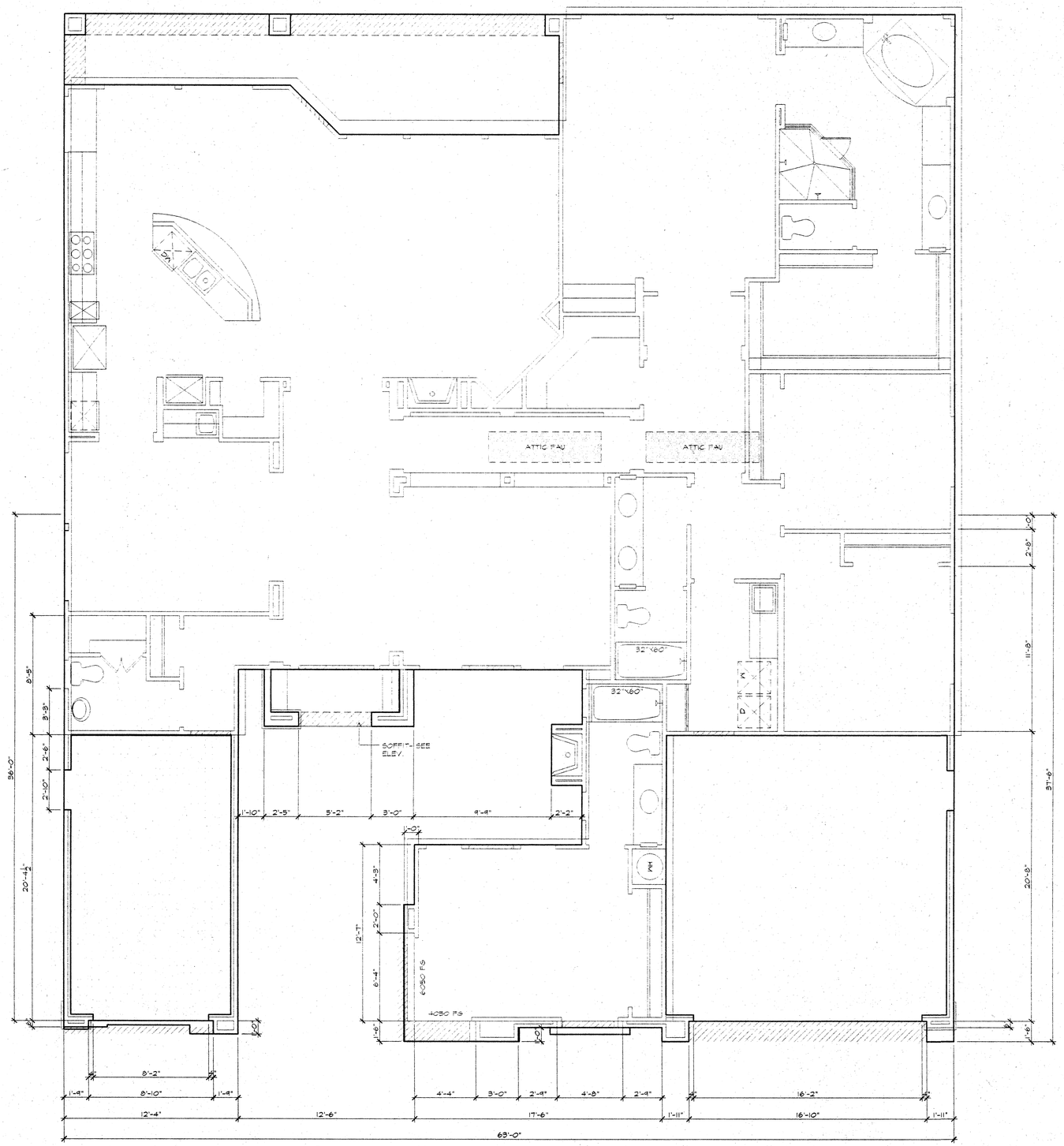

FOUNDATION PLAN 4D

SCALE : 1/4" = 1'-0"

FOR ADDITIONAL AND SPECIFIC INFORMATION NOT SHOWN HERE REFER TO MAIN FOUNDATION PLAN

FOUNDATION NOTES:

ALL DIMENSIONS SHALL BE VERIFIED WITH THE ARCHITECTS DRAWINGS ANY DISCREPANCIES SHALL BE RESOLVED PRIOR TO COMMENCING OF WORK.

1. ALL EXTERIOR WALLS ARE TO BE SECURED WITH 5/8" DIAMETER BY 10" LONG ANCHOR BOLTS EMBEDDED AT LEAST 7" INTO CONCRETE WITH A MAXIMUM SPACING OF 72" O.C. THERE SHALL BE A MINIMUM OF TWO BOLTS PER PIECE OF FOUNDATION PLATE WITH ONE BOLT LOCATED WITHIN 12" OF EA. END OF EA. PIECE. A PROPERLY SIZED NUT AND WASHER SHALL BE TIGHTENED ON EA. BOLT TO THE PLATE.
2. ALL SHEAR WALLS ARE TO BE SECURED WITH ANCHOR BOLTS SPACED PER FOUNDATION PLAN
3. ALL INTERIOR NON-SHEAR WALLS ARE TO BE SECURED WITH SHOT PINS INSTALLED PER MANUFACTURERS RECOMMENDATIONS, U.N.O. STRUCTURAL ENGINEERS CALCULATIONS GOVERN IN ALL CASES.
4. INSTALL ALL SIMPSON (OR APPROVED EQUAL) FOUNDATION HARDWARE PER MANUFACTURERS RECOMMENDATIONS. DEEPEN FOOTING WHERE NECESSARY TO PROVIDE ANCHOR EMBEDMENT AT HOLDOWN LOCATIONS.
5. PROVIDE 5/8" DIAMETER BY 12" ANCHOR BOLTS AT 3X FOUNDATION PLATES WHERE OCCURS. VERIFY WITH FRAMING PLANS.
6. 2" x 2" x 3/16" STEEL PLATE WASHERS ARE REQUIRED ON EACH ANCHOR BOLT (UBC SECT. 1806.6.1)

SOIL INFORMATION:

1. FOUNDATION SIZES, DEPTHS, AND REINFORCEMENT ARE AS RECOMMENDED WITHIN THE OWNER/DEVELOPER'S SOILS ENGINEERS REPORT.
2. OWNER/DEVELOPER AND SUBCONTRACTORS ARE TO REVIEW THE SOILS REPORT PRIOR TO COMMENCING CONSTRUCTION. IT IS THE RESPONSIBILITY OF THE OWNER, DEVELOPER AND SUBCONTRACTOR TO VERIFY THAT THE REPORT DATE ABOVE IS CURRENT AND PLAN REQUIREMENTS ARE CONSISTENT WITH ANY UPDATED SOIL REPORTS.

NON-SHADED FTG. INDICATES 12" WIDE x 12" DEEP FTG. w/ (1)#4 TOP & BOTTOM CONT.

SHADED FTG. INDICATES 15" WIDE x 18" DEEP FTG. w/ (1)#4 TOP & BOTTOM CONT.

HATCHED FTG. INDICATES GRADE BM

ANCHOR BOLTING:

AB64 : 5/8" DIA. X 10" ANCHOR BOLTS AT 64" O.C.
AB56 : 5/8" DIA. X 10" ANCHOR BOLTS AT 56" O.C.
AB48 : 5/8" DIA. X 10" ANCHOR BOLTS AT 48" O.C.
AB40 : 5/8" DIA. X 10" ANCHOR BOLTS AT 40" O.C.
AB32 : 5/8" DIA. X 10" ANCHOR BOLTS AT 32" O.C.
AB24 : 5/8" DIA. X 10" ANCHOR BOLTS AT 24" O.C.
AB16 : 5/8" DIA. X 10" ANCHOR BOLTS AT 16" O.C.
AB 8 : 5/8" DIA. X 10" ANCHOR BOLTS AT 8" O.C.
AB48X : 5/8" DIA. X 12" ANCHOR BOLTS AT 48" O.C.
AB32X : 5/8" DIA. X 12" ANCHOR BOLTS AT 32" O.C.
AB24X : 5/8" DIA. X 12" ANCHOR BOLTS AT 24" O.C.
AB16X : 5/8" DIA. X 12" ANCHOR BOLTS AT 16" O.C.
AB 8X : 5/8" DIA. X 12" ANCHOR BOLTS AT 8" O.C.
2AB : (2) 5/8" DIA X 10" ANCHOR BOLTS.
3AB : (3) 5/8" DIA. x 10" ANCHOR BOLTS.
2ABX : (2) 5/8" DIA X 12" ANCHOR BOLTS.
3ABX : (3) 5/8" DIA X 12" ANCHOR BOLTS.
2ABXX : (2) 3/4"DIA X 12" ANCHOR BOLTS.
3ABXX : (3) 3/4"DIA X 12" ANCHOR BOLTS.

2-#4 : PROVIDE A TOTAL OF 2 #4 AT TOP AND 2 #4 AT BOTTOM OF FOOTING, 3' PAST POSTS.
3-#4 : PROVIDE A TOTAL OF 3 #4 AT TOP AND 3 #4 AT BOTTOM OF FOOTING, 3' PAST POSTS.
4-#4 : PROVIDE A TOTAL OF 4 #4 AT TOP AND 4 #4 AT BOTTOM OF FOOTING, 3' PAST POSTS.

HD2A : (1) SIMPSON HD2A PER POST.
HD5A : (1) SIMPSON HD5A PER POST.
HD6A : (1) SIMPSON HD6A PER POST.
HD8A : (1) SIMPSON HD8A PER POST.
HD10A : (1) SIMPSON HD10A PER POST.
HD14A : (1) SIMPSON HD14A PER POST.
HD20A : (1) SIMPSON HD20A PER POST.
HPA : (1) SIMPSON HPAHD22 PER POST.
HPAHD22-2P : (1) SIMPSON HPAHD22-2P PER POST.
2HPA : (2) SIMPSON HPAHD22 PER POST.
MTT28B : (1) SIMPSON MTT28B PER POST.
HTT16 : (1) SIMPSON HTT16 PER POST.
LTT19 : (1) SIMPSON LTT19 PER POST.
HTT22 : (1) SIMPSON HTT22 PER POST.

POST TENSION SLAB LAYOUT NOTES:

1. POST TENSION FOUNDATION TO BE DESIGNED BY OTHERS. REFER TO THEIR DRAWINGS AND CALCULATIONS FOR COMPLETE CONSTRUCTION REQUIREMENTS.
2. THIS PLAN REFLECTS SLAB LAYOUT AND ASSISTS IN LOCATING HOLDOWNS, ANCHOR BOLTS, POST BASE HARDWARE, AND CRITICAL BEARING WALL LOADS AND POINT LOADS. ALL DIMENSIONS TO BE VERIFIED WITH ARCHITECTURAL FLOOR PLAN DIMENSIONS BY ARCHITECTS AND CONTRACTOR PRIOR TO CONSTRUCTION.
3. FOOTINGS SHALL BE EXAMINED AND CERTIFIED IN WRITING BY THE PROJECT SOIL/GEOLOGY ENGINEER PRIOR TO INSPECTIONS AND PLACEMENT OF CONCRETE.
4. CONCRETE TYPE TO BE DETERMINED UPON COMPLETION OF ROUGH GRADING, AND VERIFIED WITH SOILS ENGINEER RECOMMENDATIONS PRIOR TO PLACEMENT.
5. MAXIMUM BEARING WALL LOAD= 1600 PLF. REFER TO STRUCTURAL ENGINEER'S CALCULATIONS.
6. ALL POINT LOADS GREATER THAN 5000 lbs HAVE BEEN NOTED ON TO THE PLANS. POST TENSIONED SLAB IS ASSUMED TO BE ABLE TO SUPPORT POINT LOADS LESS THAN 5000 lbs. POST TENSION ENGINEER SHALL VERIFY.
7. POST TENSION ENGINEER TO PROVIDE AND LOCATE CONTROL JOINTS TO MINIMIZE SLAB CRACKS.
8. ALL ENTRY PORCH AND EXTERIOR PATIO/DECK PADS ARE TO BE INCLUDED IN POST-TENSION DESIGN-LAYOUTS

REVISIONS	BY

ESI/FME, INC.
STRUCTURAL ENGINEERS
1800 E. 16TH STREET
SANTA ANA, CA 92701
PHONE: 714-835-2800
FAX: 714-835-2819

JN.-2459 11/30/00

PROFESSIONAL ENGINEER — PAUL R. KOETTER — 24954 — STRUCTURAL — STATE OF CALIFORNIA

THE ARTISAN COLLECTION

CATHEDRAL CITY, CALIFORNIA
FORD-DA VALL GROUP, LLC

DRAWN	
CHECKED	
DATE	DEC. 8, 2000
JOB NO.	2459
SHEET	S4-1D
SHEET:	OF:

FEB 28 2001

AutoCAD File: X:\Jobs\2459\2459S4ld.dwg Plotted at: Wed Feb 28 14:04:29 2001

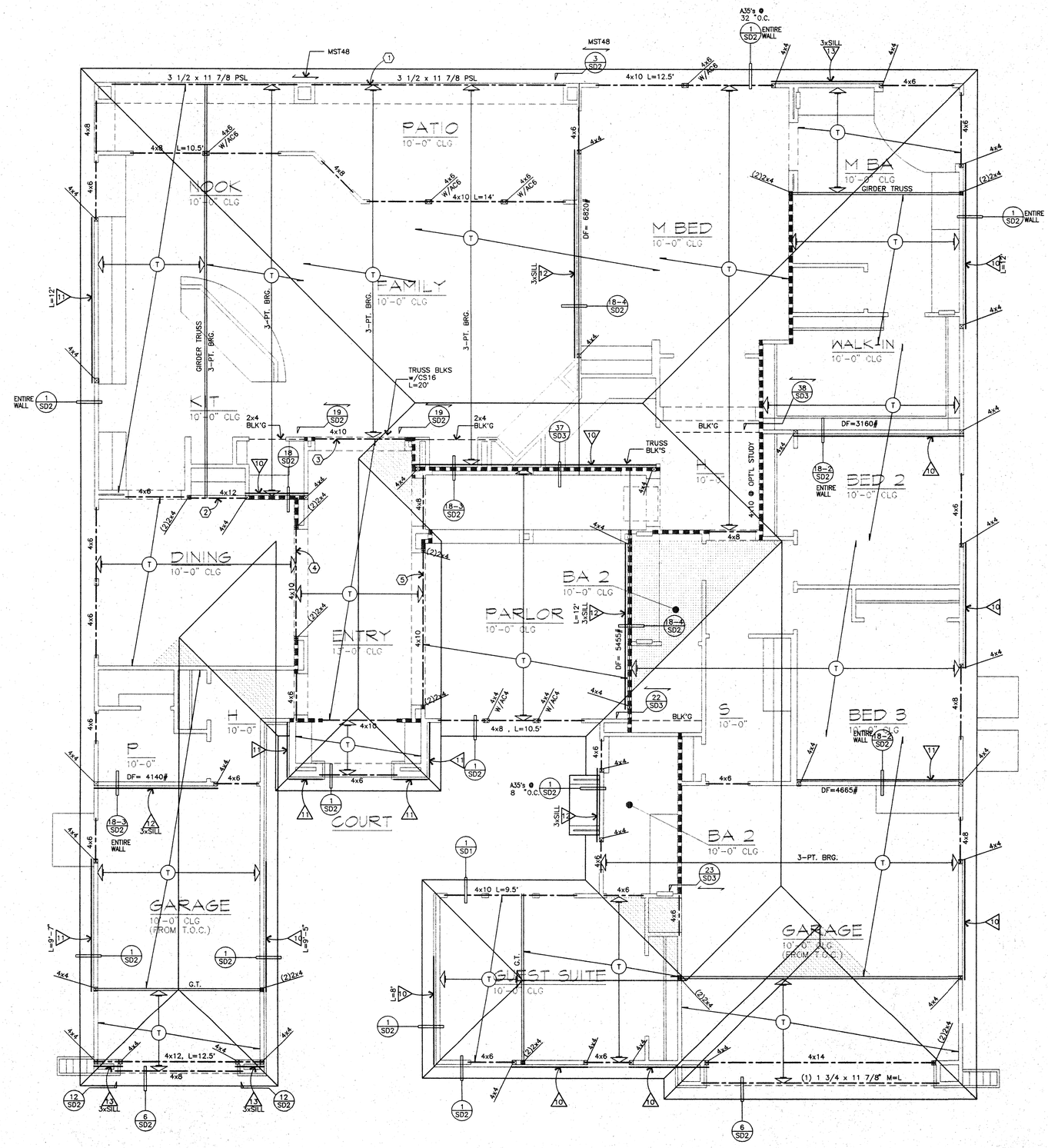

ROOF FRAMING PLAN 4

SCALE : 1/4" = 1'-0"

LATERAL SHEAR NOTES:

(1997 U.B.C ; SEISMIC ZONE 4)

FRAMING MEMBERS DOUGLAS FIR-LARCH AT 16" O.C

△# **VERTICAL:**

1. 2 LAYERS 5/8" BLOCKED DRYWALL WITH 6d COOLER NAILS AT 8" O.C AT EDGES & FIELD AT BASE LAYER, 8d COOLER NAILS AT 7" O.C AT EDGES AND FIELD AT FACE LAYER ..... 125 PLF
2. 1/2" DRYWALL WITH 5d COOLER NAILS AT 7" O.C AT EDGES AND FIELD (TABLE 25-I UBC) ..... 50 PLF
3. 5/8" DRYWALL WITH 6d COOLER NAILS AT 7" O.C AT EDGES AND FIELD (TABLE 25-I UBC) ..... 58 PLF
4. 1/2" DRYWALL WITH 5d COOLER NAILS AT 4" O.C AT EDGES AND FIELD (TABLE 25-I UBC) ..... 63 PLF
5. 5/8" DRYWALL WITH 6d COOLER NAILS AT 4" O.C AT EDGES AND FIELD (TABLE 25-I UBC) ..... 73 PLF
6. 1/2" BLOCKED DRYWALL WITH 5d COOLER NAILS AT 4" O.C AT EDGES AND FIELD. (TABLE 25-I UBC) ..... 75 PLF
7. 5/8" BLOCKED DRYWALL WITH 6d COOLER NAILS AT 4" O.C AT EDGES AND FIELD. (TABLE 25-I UBC) ..... 88 PLF
8. 7/8" STUCCO OVER APPROVED LATH WITH 16 GAUGE STAPLES AT 6" O.C. AT TOP AND BOTTOM PLATES, EDGES OF SHEAR WALL, AND FIELD (TABLE 25-I UBC) ..... 180 PLF
9. 7/8" STUCCO OVER APPROVED LATH WITH 16 GAUGE STAPLES AT 3" O.C AT TOP AND BOTTOM PLATES, EDGES AND 6" O.C AT FIELD. ICBO REPORT NO.1254 (OR EQUAL) ..... 260 PLF
10. 3/8" WOOD STRUCTURAL PANEL WITH 8d COMMON NAILS AT 6" O.C AT EDGES AND 12" O.C AT FIELD (TABLE 23-II-I-1 UBC) ..... 260 PLF
11. 3/8" WOOD STRUCTURAL PANEL WITH 8d COMMON NAILS AT 4" O.C AT EDGES AND 12" O.C AT FIELD (TABLE 23-II-I-1 UBC) ..... 350 PLF
12. 3/8" WOOD STRUCTURAL PANEL WITH 8d COMMON NAILS AT 3" O.C AT EDGES AND 12" O.C AT FIELD (TABLE 23-II-I-1 UBC) ..... 490 PLF
13. 3/8" WOOD STRUCTURAL PANEL WITH 8d COMMON NAILS AT 2" O.C AT EDGES AND 12" O.C AT FIELD (TABLE 23-II-I-1 UBC) ..... 640 PLF
14. 1/2"(OR 15/32) WOOD STRUCTURAL PANEL WITH 10d COMMON NAILS AT 2" O.C AT EDGES AND 12" O.C AT FIELD (TABLE 23-II-I-1 UBC) ..... 770 PLF
15. 1/2"(OR 15/32) STRUCT. I WOOD PANEL WITH 10d COMMON NAILS AT 2" O.C AT EDGES AND 12" O.C AT FIELD (TABLE 23-II-I-1 UBC) ..... 870 PLF

NOTES:

A. WOOD STRUCTURAL PANEL: MATERIAL APPROVED BY APA, PFS/TECO OR PITTSBURG TESTING LABORATORIES (THIS INCLUDES OSB) THESE VALUES ARE FOR DOUG-FIR LARCH OR SOUTHERN PINE, OTHER LUMBER SPECIES MAY DIFFER IN SHEAR CAPACITIES.

B. PROVIDE 2X BLOCKING AT HORIZONTAL WOOD STRUCTURAL PANEL PANEL JOINTS.

C. WHERE WOOD STRUCTURAL PANEL IS APPLIED ON BOTH FACES OF WALL AND NAIL SPACING IS LESS THAN 6" O.C, PANEL JOINTS SHALL BE OFFSET TO FALL ON DIFFERENT FRAMING MEMBERS OR FRAMING SHALL BE 3X OR WIDER AND NAILS STAGGERED ON EACH SIDE.

D. FOR SHEAR WALLS △12 TO △15 USE THE FOLLOWING:
   1) USE 3x MUDSILL
   2) USE 3x MEMBER @ PANEL JOINTS & HORIZONTAL BLOCKING
   3) NAILINGS SHALL BE STAGGERED

E. 10d SHORT BOX NAILS MAY BE USED IN LIEU OF 8d COMMON NAILS @ SHEAR WALLS ONLY.

F. 2" x 2" x 3/16" STEEL PLATE WASHERS ARE REQUIRED ON EACH ANCHOR BOLT. (UBC SECT. 1806.6.1)

HORIZONTAL:

ALL ROOF AND FLOOR SHEATHING TO BE EXPOSURE I OR EXTERIOR (TABLE 23-I-E-1 AND 23-II-H UBC)

ROOF: JOIST SPACING EQUAL TO OR LESS THAN 24" O.C: 15/32"WOOD STRUCTURAL PANEL PII 24/0, WITH 8d's AT 6" O.C AT EDGES AND BOUNDARIES, 12" O.C FIELD.

FLOOR: * JOIST SPACING EQUAL TO OR LESS THAN 16" O.C: 19/32" WOOD STRUCTURAL PANEL T&G SHTG, PII 32/16, w/10d's AT 6" O.C AT EDGES AND BOUNDARIES, 10" O.C FIELD.

JOIST SPACING EQUAL TO OR LESS THAN 20" O.C. 19/32" WOOD STRUCTURAL PANEL T&G SHTG, PII 40/20, w/10d's AT 6" O.C AT EDGES AND BOUNDARIES, 10" O.C FIELD.

JOIST SPACING EQUAL TO OR LESS THAN 24" O.C: 23/32" WOOD STRUCTURAL PANEL T&G SHTG, PII 48/24, w/10d's AT 6" O.C AT EDGES AND BOUNDARIES, 10" O.C FIELD.

* PANEL EDGES SHALL HAVE APPROVED T&G JOINTS OR SHALL BE SUPPORTED WITH BLOCKING NOT REQUIRED WHEN LIGHTWEIGHT CONCRETE IS PLACED OVER SUBFLOOR.

FRAMING LEGEND:

- INDICATES SPAN AND DIRECTION OF ROOF JOISTS AND RAFTERS
- INDICATES SPAN AND DIRECTION OF TRUSSES
- INDICATES SPAN AND DIRECTION OF FLOOR JOISTS
- INDICATES SPAN AND DIRECTION OF CEILING JOISTS
- INDICATES SPAN AND DIRECTION OF DECK JOISTS (SLOPED AS REQUIRED)

A	2X6 AT 12" O.C
B	2X6 AT 16" O.C
C	2X6 AT 24" O.C
D	2X8 AT 12" O.C
E	2X8 AT 16" O.C
F	2X8 AT 24" O.C
G	2X10 AT 12" O.C
H	2X10 AT 16" O.C
J	2X10 AT 24" O.C
K	(2)2X10 AT 16" O.C
L	2X12 AT 12" O.C
M	2X12 AT 16" O.C
N	2X12 AT 24" O.C
P	(2)2X12 AT 16" O.C
T	TRUSS AT 24" O.C

I-JOIST TABLE

MARK	SPACING	SIZE & MANUFACTURER' OPTIONS
Q-	I-JOIST @ 12" O.C.	a) 9 1/2" TJI / 150
R-	I-JOIST @ 16" O.C.	b) 9 1/2" LPI / 150
S-	I-JOIST @ 19.2" O.C.	c) 9 1/2" BCI / 450
U-	I-JOIST @ 12" O.C.	a) 11 7/8" TJI / 150
V-	I-JOIST @ 16" O.C.	b) 11 7/8" LPI / 150
W-	I-JOIST @ 19.2" O.C.	c) 11 7/8" BCI / 450
X-	I-JOIST @ 12" O.C.	a) 14" TJI / 250
Y-	I-JOIST @ 16" O.C.	b) 14" LPI / 250
Z-	I-JOIST @ 19.2" O.C.	c) 14" BCI / 450

G=L INDICATES (1) 1 3/4" x 11 7/8" GANGLAM LVL 1.8 E
GL INDICATES GANG-LAM LVL 1.8 E
M=L INDICATES (1) 1 3/4" x 11 7/8" MICROLAM
P=L (OR PSL) INDICATES PARALLAM

(#) HEADERS AND BEAMS, REFER TO ENGINEERING CALCS.

■■■ INDICATES INTERIOR BEARING WALL

NOTE: △* APPLY SHEAR PRIOR TO FRAMING OF PERPENDICULAR WALL AND/OR BOX-OUTS. (WHERE APPLICABLE)

REVISIONS	BY

ESI/FME, INC.
STRUCTURAL ENGINEERS
1800 E. 16TH STREET
SANTA ANA, CA 92701
PHONE: 714-835-2800
FAX: 714-835-2819
JN:-2459 11/30/00

THE ARTISAN COLLECTION

CATHEDRAL CITY, CALIFORNIA
FORD-DA VALL GROUP, LLC

DRAWN	
CHECKED	
DATE	DEC. 8, 2000
JOB NO.	2459
SHEET	S4-2
SHEET:	OF:

AutoCAD File: u:\files\2459\2459sh2.dwg Plotted at: Mon Feb 26 13:24:30 2001
FEB 28 2001

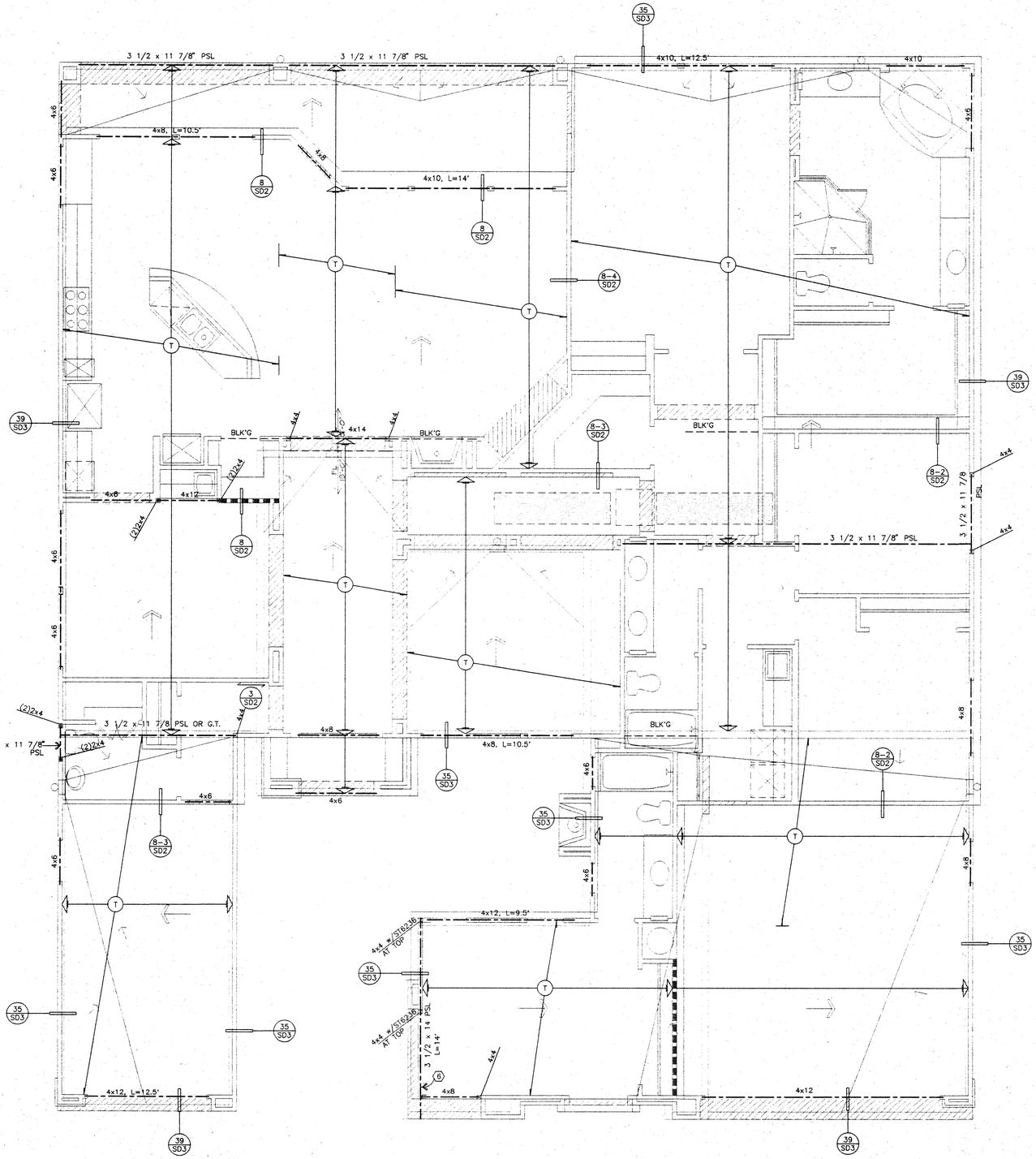

ROOF FRAMING PLAN 4D

SCALE : 1/4" = 1'-0"

FOR ADDITIONAL AND SPECIFIC INFORMATION NOT SHOWN HERE REFER TO MAIN FRAMING PLAN

LATERAL SHEAR NOTES:

(1997 U.B.C ; SEISMIC ZONE 4)

FRAMING MEMBERS DOUGLAS FIR-LARCH AT 16" O.C

⚠1 **VERTICAL:**

1. 2 LAYERS 5/8" BLOCKED DRYWALL WITH 6d COOLER NAILS AT 9" O.C AT EDGES & FIELD AT BASE LAYER, 8d COOLER NAILS AT 7" O.C AT EDGES AND FIELD AT FACE LAYER .....125 PLF
2. 1/2" DRYWALL WITH 5d COOLER NAILS AT 7" O.C AT EDGES AND FIELD (TABLE 25-I UBC) .....50 PLF
3. 5/8" DRYWALL WITH 6d COOLER NAILS AT 7" O.C AT EDGES AND FIELD (TABLE 25-I UBC) .....58 PLF
4. 1/2" DRYWALL WITH 5d COOLER NAILS AT 4" O.C AT EDGES AND FIELD (TABLE 25-I UBC) .....63 PLF
5. 5/8" DRYWALL WITH 6d COOLER NAILS AT 4" O.C AT EDGES AND FIELD (TABLE 25-I UBC) .....73 PLF
6. 1/2" BLOCKED DRYWALL WITH 5d COOLER NAILS AT 4" O.C AT EDGES AND FIELD. (TABLE 25-I UBC) .....75 PLF
7. 5/8" BLOCKED DRYWALL WITH 6d COOLER NAILS AT 4" O.C AT EDGES AND FIELD. (TABLE 25-I UBC) .....88 PLF
8. 7/8" STUCCO OVER APPROVED LATH WITH 16 GAUGE STAPLES AT 6" O.C. AT TOP AND BOTTOM PLATES, EDGES OF SHEAR WALL, AND FIELD (TABLE 25-I UBC) .....180 PLF
9. 7/8" STUCCO OVER APPROVED LATH WITH 16 GAUGE STAPLES AT 3" O.C AT TOP AND BOTTOM PLATES, EDGES AND 6" O.C AT FIELD. ICBO REPORT NO.1254 (OR EQUAL) .....260 PLF
10. 3/8" WOOD STRUCTURAL PANEL WITH 8d COMMON NAILS AT 6" O.C AT EDGES AND 12" O.C AT FIELD (TABLE 23-II-I-1 UBC) .....260 PLF
11. 3/8" WOOD STRUCTURAL PANEL WITH 8d COMMON NAILS AT 4" O.C AT EDGES AND 12" O.C AT FIELD (TABLE 23-II-I-1 UBC) .....350 PLF
12. 3/8" WOOD STRUCTURAL PANEL WITH 8d COMMON NAILS AT 3" O.C AT EDGES AND 12" O.C AT FIELD (TABLE 23-II-I-1 UBC) .....490 PLF
13. 3/8" WOOD STRUCTURAL PANEL WITH 8d COMMON NAILS AT 2" O.C AT EDGES AND 12" O.C AT FIELD (TABLE 23-II-I-1 UBC) .....640 PLF
14. 1/2"(OR 15/32) WOOD STRUCTURAL PANEL WITH 10d COMMON NAILS AT 2" O.C AT EDGES AND 12" O.C AT FIELD (TABLE 23-II-I-1 UBC) .....770 PLF
15. 1/2"(OR 15/32) STRUCT. I WOOD PANEL WITH 10d COMMON NAILS AT 2" O.C AT EDGES AND 12" O.C AT FIELD (TABLE 23-II-I-1 UBC) .....870 PLF

NOTES:

A. WOOD STRUCTURAL PANEL: MATERIAL APPROVED BY APA, PFS/TECO OR PITTSBURG TESTING LABORATORIES (THIS INCLUDES DSB) THESE VALUES ARE FOR DOUG-FIR LARCH OR SOUTHERN PINE, OTHER LUMBER SPECIES MAY DIFFER IN SHEAR CAPACITIES.

B. PROVIDE 2X BLOCKING AT HORIZONTAL WOOD STRUCTURAL PANEL PANEL JOINTS.

C. WHERE WOOD STRUCTURAL PANEL IS APPLIED ON BOTH FACES OF WALL AND NAIL SPACING IS LESS THAN 6" O.C. PANEL JOINTS SHALL BE OFFSET TO FALL ON DIFFERENT FRAMING MEMBERS OR FRAMING SHALL BE 3X OR WIDER AND NAILS STAGGERED ON EACH SIDE.

D. FOR SHEAR WALLS ⚠12 TO ⚠15 USE THE FOLLOWING:
   1) USE 3x MUDSILL
   2) USE 3x MEMBER @ PANEL JOINTS & HORIZONTAL BLOCKING
   3) NAILINGS SHALL BE STAGGERED

E. 10d SHORT BOX NAILS MAY BE USED IN LIEU OF 8d COMMON NAILS @ SHEAR WALLS ONLY.

F. 2" x 2" x 3/16" STEEL PLATE WASHERS ARE REQUIRED ON EACH ANCHOR BOLT. (UBC SECT. 1806.6.1)

HORIZONTAL:

ALL ROOF AND FLOOR SHEATHING TO BE EXPOSURE I OR EXTERIOR (TABLE 23-II-E-1 AND 23-II-H UBC)

ROOF: JOIST SPACING EQUAL TO OR LESS THAN 24" O.C: 15/32"WOOD STRUCTURAL PANEL PII 24/0, WITH 8d's AT 6" O.C AT EDGES AND BOUNDARIES, 12" O.C FIELD.

FLOOR: * JOIST SPACING EQUAL TO OR LESS THAN 16" O.C: 19/32" WOOD STRUCTURAL PANEL T&G SHTG, PII 32/16, w/10d's AT 6" O.C AT EDGES AND BOUNDARIES, 10" O.C FIELD.

JOIST SPACING EQUAL TO OR LESS THAN 20" O.C: 19/32" WOOD STRUCTURAL PANEL T&G SHTG, PII 40/20, w/10d's AT 6" O.C AT EDGES AND BOUNDARIES, 10" O.C FIELD.

JOIST SPACING EQUAL TO OR LESS THAN 24" O.C: 23/32" WOOD STRUCTURAL PANEL T&G SHTG, PII 48/24, w/10d's AT 6" O.C AT EDGES AND BOUNDARIES, 10" O.C FIELD.

* PANEL EDGES SHALL HAVE APPROVED T&G JOINTS OR SHALL BE SUPPORTED WITH BLOCKING NOT REQUIRED WHEN LIGHTWEIGHT CONCRETE IS PLACED OVER SUBFLOOR.

FRAMING LEGEND:

- INDICATES SPAN AND DIRECTION OF ROOF JOISTS AND RAFTERS
- INDICATES SPAN AND DIRECTION OF TRUSSES
- INDICATES SPAN AND DIRECTION OF FLOOR JOISTS
- INDICATES SPAN AND DIRECTION OF CEILING JOISTS
- INDICATES SPAN AND DIRECTION OF DECK JOISTS (SLOPED AS REQUIRED)

A	2X6 AT 12" O.C
B	2X6 AT 16" O.C
C	2X6 AT 24" O.C
D	2X8 AT 12" O.C
E	2X8 AT 16" O.C
F	2X8 AT 24" O.C
G	2X10 AT 12" O.C
H	2X10 AT 16" O.C
J	2X10 AT 24" O.C
K	(2)2X10 AT 16" O.C
L	2X12 AT 12" O.C
M	2X12 AT 16" O.C
N	2X12 AT 24" O.C
P	(2)2X12 AT 16" O.C
T	TRUSS AT 24" O.C

I-JOIST TABLE		
MARK	SPACING	SIZE & MANUFACTURER OPTIONS
Q-	I-JOIST @ 12" O.C.	a) 9 1/2" TJI / 150
R-	I-JOIST @ 16" O.C.	b) 9 1/2" LPI / 150
S-	I-JOIST @ 19.2" O.C.	c) 9 1/2" BCI / 450
U-	I-JOIST @ 12" O.C.	a) 11 7/8" TJI / 150
V-	I-JOIST @ 16" O.C.	b) 11 7/8" LPI / 150
W-	I-JOIST @ 19.2" O.C.	c) 11 7/8" BCI / 450
X-	I-JOIST @ 12" O.C.	a) 14" TJI / 250
Y-	I-JOIST @ 16" O.C.	b) 14" LPI / 250
Z-	I-JOIST @ 19.2" O.C.	c) 14" BCI / 450

G=L INDICATES (1) 1 3/4" x 11 7/8" GANGLAM LVL 1.8 E
GL INDICATES GANG-LAM LVL 1.8 E
M=L INDICATES (1) 1 3/4" x 11 7/8" MICROLAM
P=L (OR PSL) INDICATES PARALLAM

⚠1 HEADERS AND BEAMS, REFER TO ENGINEERING CALCS.

■ ■ ■ INDICATES INTERIOR BEARING WALL

NOTE: ⚠* APPLY SHEAR PRIOR TO FRAMING OF PERPENDICULAR WALL AND/OR BOX-OUTS. (WHERE APPLICABLE)

REVISIONS	BY

ESI/FME, INC.
STRUCTURAL ENGINEERS
1600 E. 16TH STREET
SUITE A, SANTA ANA, CA 92701
PHONE: 714-835-2800
FAX: 714-835-2819

JN - 2459 11/30/00

THE ARTISAN COLLECTION
CATHEDRAL CITY, CALIFORNIA
FORD-DA VALL GROUP, LLC

DRAWN	
CHECKED	
DATE	DEC. 8, 2000
JOB NO.	2459
SHEET	S4-2D
SHEET:	OF:

AutoCAD File: x:\jobs\2459\2459s2d.dwg Plotted at: Wed Feb 28 14:05:09 2001

FEB 28 2001

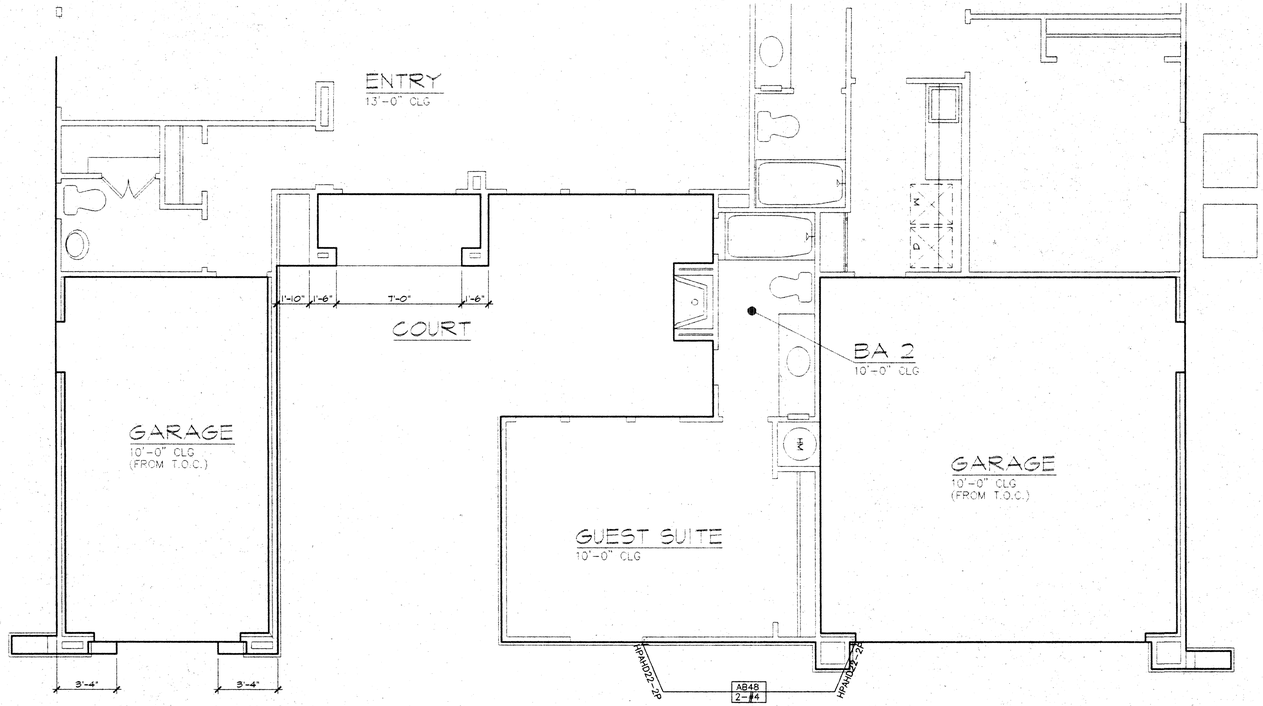

FOUNDATION ELEV 4B

SCALE : 1/4" = 1'-0"

FOR ADDITIONAL AND SPECIFIC INFORMATION NOT SHOWN HERE REFER TO MAIN FOUNDATION PLAN

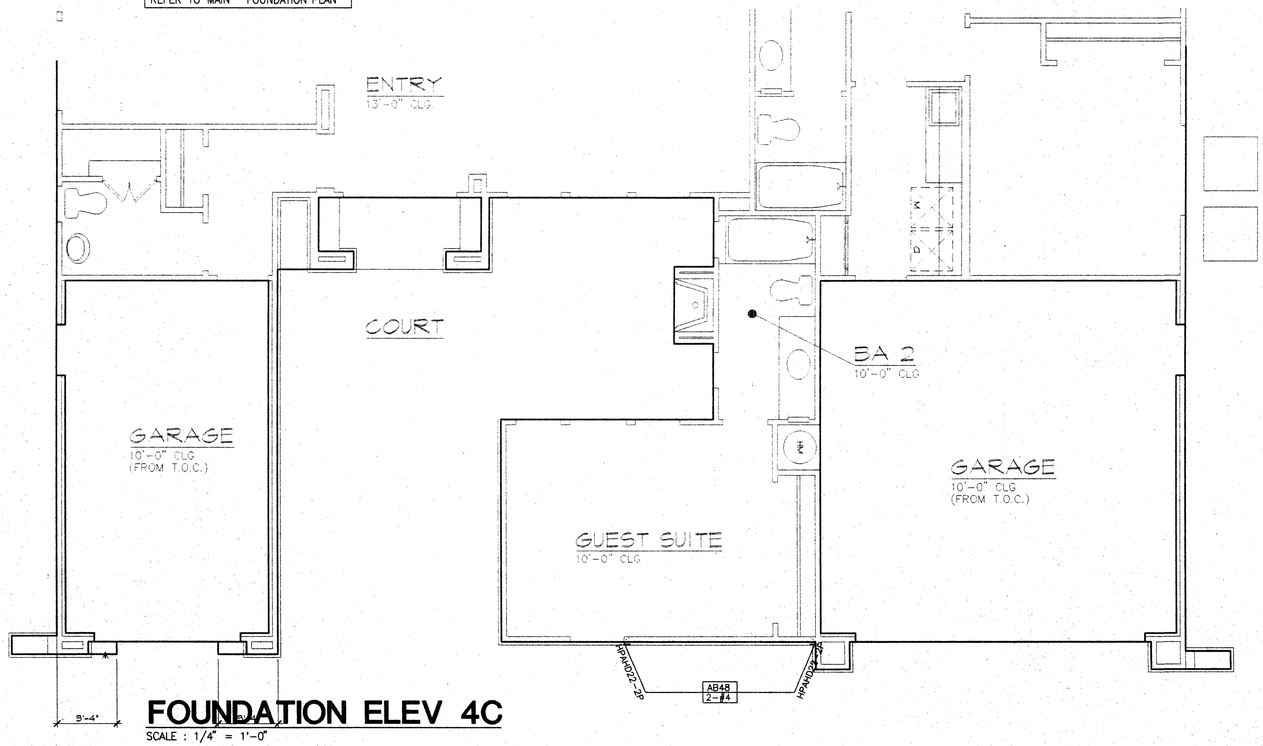

FOUNDATION ELEV 4C

SCALE : 1/4" = 1'-0"

FOR ADDITIONAL AND SPECIFIC INFORMATION NOT SHOWN HERE REFER TO MAIN FOUNDATION PLAN

FOUNDATION NOTES:

ALL DIMENSIONS SHALL BE VERIFIED WITH THE ARCHITECTS DRAWINGS ANY DISCREPANCIES SHALL BE RESOLVED PRIOR TO COMMENCING OF WORK.

1. ALL EXTERIOR WALLS ARE TO BE SECURED WITH 5/8" DIAMETER BY 10" LONG ANCHOR BOLTS EMBEDDED AT LEAST 7" INTO CONCRETE WITH A MAXIMUM SPACING OF 72" O.C. THERE SHALL BE A MINIMUM OF TWO BOLTS PER PIECE OF FOUNDATION PLATE WITH ONE BOLT LOCATED WITHIN 12" OF EA. END OF EA PIECE. A PROPERLY SIZED NUT AND WASHER SHALL BE TIGHTENED ON EA BOLT TO THE PLATE.
2. ALL SHEAR WALLS ARE TO BE SECURED WITH ANCHOR BOLTS SPACED PER FOUNDATION PLAN
3. ALL INTERIOR NON-SHEAR WALLS ARE TO BE SECURED WITH SHOT PINS INSTALLED PER MANUFACTURERS RECOMMENDATIONS, U.N.O. STRUCTURAL ENGINEERS CALCULATIONS GOVERN IN ALL CASES.
4. INSTALL ALL SIMPSON (OR APPROVED EQUAL) FOUNDATION HARDWARE PER MANUFACTURERS RECOMMENDATIONS. DEEPEN FOOTING WHERE NECESSARY TO PROVIDE ANCHOR EMBEDMENT AT HOLDOWN LOCATIONS.
5. PROVIDE 5/8" DIAMETER BY 12" ANCHOR BOLTS AT 3X FOUNDATION PLATES WHERE OCCURS. VERIFY WITH FRAMING PLANS.
6. 2" x 2" x 3/16" STEEL PLATE WASHERS ARE REQUIRED ON EACH ANCHOR BOLT (UBC SECT. 1806.6.1)

SOIL INFORMATION:

1. FOUNDATION SIZES, DEPTHS, AND REINFORCEMENT ARE AS RECOMMENDED WITHIN THE OWNER/DEVELOPER'S SOILS ENGINEERS REPORT.
2. OWNER/DEVELOPER AND SUBCONTRACTORS ARE TO REVIEW THE SOILS REPORT PRIOR TO COMMENCING CONSTRUCTION. IT IS THE RESPONSIBILITY OF THE OWNER, DEVELOPER AND SUBCONTRACTOR TO VERIFY THAT THE REPORT DATE ABOVE IS CURRENT AND PLAN REQUIREMENTS ARE CONSISTENT WITH ANY UPDATED SOIL REPORTS.

NON-SHADED FTG. INDICATES 12" WIDE x 12" DEEP FTG. w/ (1)#4 TOP & BOTTOM CONT.

SHADED FTG. INDICATES 15" WIDE x 18" DEEP FTG. w/ (1)#4 TOP & BOTTOM CONT.

HATCHED FTG. INDICATES GRADE BM

ANCHOR BOLTING:

AB64 : 5/8" DIA. X 10" ANCHOR BOLTS AT 64" O.C.
AB56 : 5/8" DIA. X 10" ANCHOR BOLTS AT 56" O.C.
AB48 : 5/8" DIA. X 10" ANCHOR BOLTS AT 48" O.C.
AB40 : 5/8" DIA. X 10" ANCHOR BOLTS AT 40" O.C.
AB32 : 5/8" DIA. X 10" ANCHOR BOLTS AT 32" O.C.
AB24 : 5/8" DIA. X 10" ANCHOR BOLTS AT 24" O.C.
AB16 : 5/8" DIA. X 10" ANCHOR BOLTS AT 16" O.C.
AB 8 : 5/8" DIA. X 10" ANCHOR BOLTS AT 8" O.C.
AB48X : 5/8" DIA. X 12" ANCHOR BOLTS AT 48" O.C.
AB32X 5/8" DIA. X 12" ANCHOR BOLTS AT 32" O.C.
AB24X : 5/8" DIA. X 12" ANCHOR BOLTS AT 24" O.C.
AB16X : 5/8" DIA. X 12" ANCHOR BOLTS AT 16" O.C.
AB 8X : 5/8" DIA X 12" ANCHOR BOLTS AT 8" O.C.
2AB : (2) 5/8" DIA X 10" ANCHOR BOLTS.
3AB : (3) 5/8" DIA. x 10" ANCHOR BOLTS.
2ABX : (2) 5/8" DIA X 12" ANCHOR BOLTS.
3ABX : (3) 5/8" DIA X 12" ANCHOR BOLTS.
2ABXX : (2) 3/4"DIA X 12" ANCHOR BOLTS.
3ABXX : (3) 3/4"DIA X 12" ANCHOR BOLTS.

2-#4 : PROVIDE A TOTAL OF 2 #4 AT TOP AND 2 #4 AT BOTTOM OF FOOTING, 3' PAST POSTS.
3-#4 : PROVIDE A TOTAL OF 3 #4 AT TOP AND 3 #4 AT BOTTOM OF FOOTING, 3' PAST POSTS.
4-#4 : PROVIDE A TOTAL OF 4 #4 AT TOP AND 4 #4 AT BOTTOM OF FOOTING, 3' PAST POSTS.

HD2A : (1) SIMPSON HD2A PER POST.
HD5A : (1) SIMPSON HD5A PER POST.
HD6A : (1) SIMPSON HD6A PER POST.
HD8A : (1) SIMPSON HD8A PER POST.
HD10A : (1) SIMPSON HD10A PER POST.
HD14A : (1) SIMPSON HD14A PER POST.
HD20A : (1) SIMPSON HD20A PER POST.
HPA : (1) SIMPSON HPAHD22 PER POST.
HPAHD22-2P : (1) SIMPSON HPAHD22-2P PER POST.
2HPA : (2) SIMPSON HPAHD22 PER POST.
MTT28B : (1) SIMPSON MTT28B PER POST.
HTT16 : (1) SIMPSON HTT16 PER POST.
LTT19 : (1) SIMPSON LTT19 PER POST.
HTT22 : (1) SIMPSON HTT22 PER POST.

REVISIONS	BY

ESI/FME INC.
STRUCTURAL ENGINEERS
1800 E. 16TH STREET
SANTA ANA, CA 92701
PHONE: 714-835-2800
FAX: 714-835-2819

JN. -2459 11/30/00

THE ARTISAN COLLECTION
CATHEDRAL CITY, CALIFORNIA
FORD-DA VALL GROUP, LLC

DRAWN	
CHECKED	
DATE	DEC. 8, 2000
JOB NO.	2459
SHEET	S4-3
SHEET:	OF:

FEB28 2001

AutoCAD File: J:\files\2459\2459S43.dwg Plotted at: Mon Feb 26 13:25:38 2001

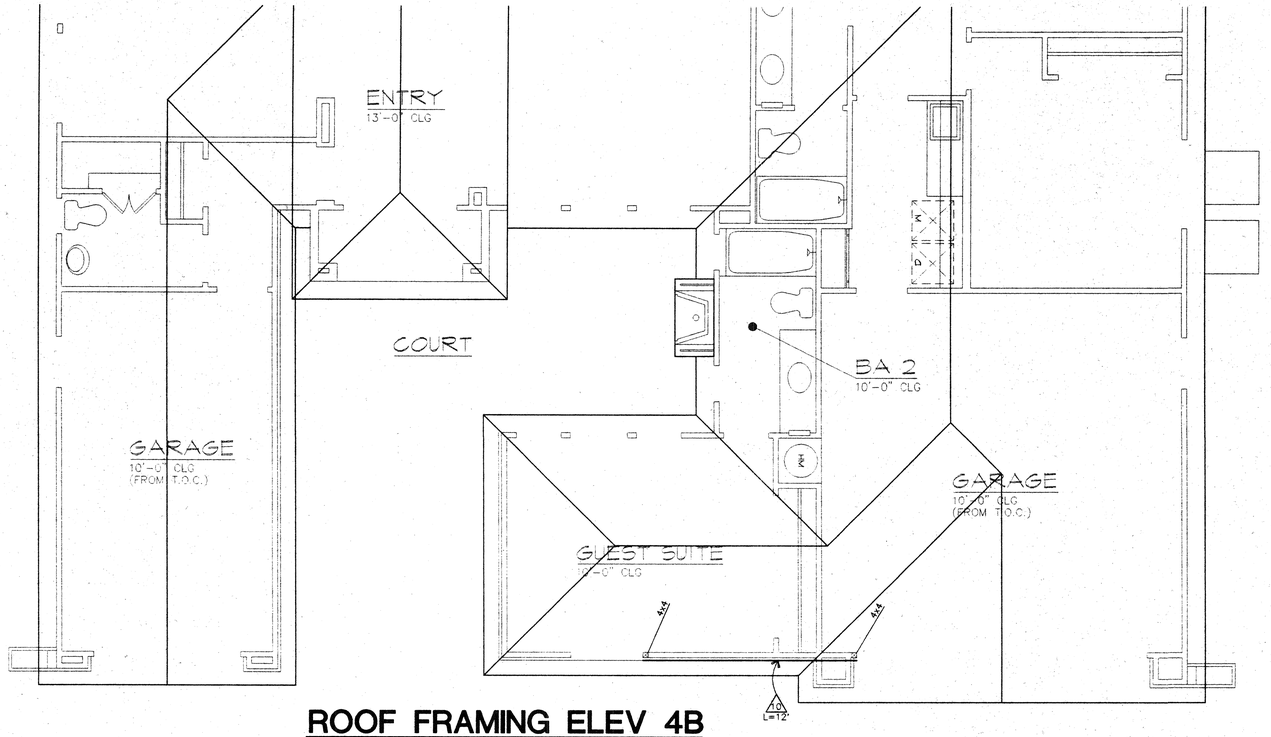

ROOF FRAMING ELEV 4B

SCALE : 1/4" = 1'-0"

FOR ADDITIONAL AND SPECIFIC INFORMATION NOT SHOWN HERE REFER TO MAIN FRAMING PLAN

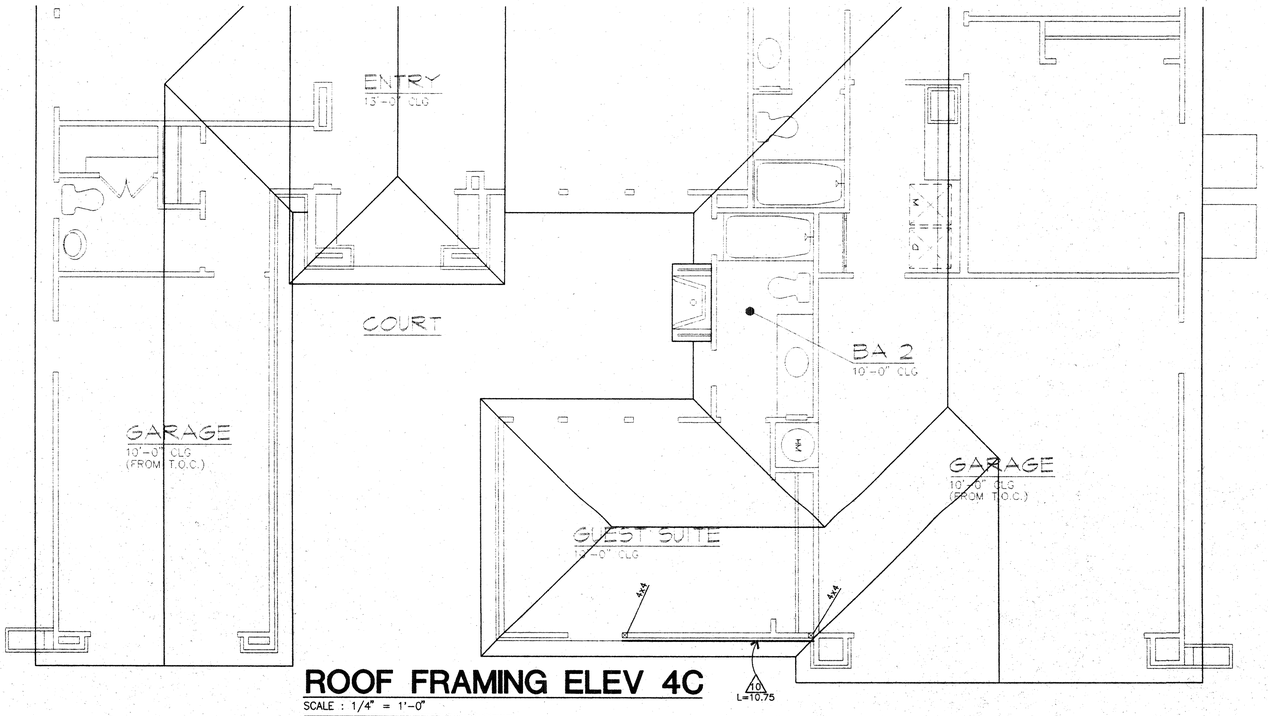

ROOF FRAMING ELEV 4C

SCALE : 1/4" = 1'-0"

FOR ADDITIONAL AND SPECIFIC INFORMATION NOT SHOWN HERE REFER TO MAIN FRAMING PLAN

LATERAL SHEAR NOTES:

(1997 U.B.C ; SEISMIC ZONE 4)

	VERTICAL:	FRAMING MEMBERS DOUGLAS FIR-LARCH AT 16" O.C
1.	2 LAYERS 5/8" BLOCKED DRYWALL WITH 6d COOLER NAILS AT 9" O.C AT EDGES & FIELD AT BASE LAYER, 8d COOLER NAILS AT 7" O.C AT EDGES AND FIELD AT FACE LAYER	.....125 PLF
2.	1/2" DRYWALL WITH 5d COOLER NAILS AT 7" O.C AT EDGES AND FIELD (TABLE 25-I UBC)	.....50 PLF
3.	5/8" DRYWALL WITH 6d COOLER NAILS AT 7" O.C AT EDGES AND FIELD (TABLE 25-I UBC)	.....58 PLF
4.	1/2" DRYWALL WITH 5d COOLER NAILS AT 4" O.C AT EDGES AND FIELD (TABLE 25-I UBC)	.....63 PLF
5.	5/8" DRYWALL WITH 6d COOLER NAILS AT 4" O.C AT EDGES AND FIELD (TABLE 25-I UBC)	.....73 PLF
6.	1/2" BLOCKED DRYWALL WITH 5d COOLER NAILS AT 4" O.C AT EDGES AND FIELD. (TABLE 25-I UBC)	.....75 PLF
7.	5/8" BLOCKED DRYWALL WITH 6d COOLER NAILS AT 4" O.C AT EDGES AND FIELD. (TABLE 25-I UBC)	.....88 PLF
8.	7/8" STUCCO OVER APPROVED LATH WITH 16 GAUGE STAPLES AT 6" O.C. AT TOP AND BOTTOM PLATES, EDGES OF SHEAR WALL, AND FIELD (TABLE 25-I UBC)	..... 180 PLF
9.	7/8" STUCCO OVER APPROVED LATH WITH 16 GAUGE STAPLES AT 3" O.C AT TOP AND BOTTOM PLATES, EDGES AND 6" O.C AT FIELD. ICBO REPORT NO.1254 (OR EQUAL)	..... 260 PLF
10.	3/8" WOOD STRUCTURAL PANEL WITH 8d COMMON NAILS AT 6" O.C AT EDGES AND 12" O.C AT FIELD (TABLE 23-II-I-1 UBC)	.....260 PLF
11.	3/8" WOOD STRUCTURAL PANEL WITH 8d COMMON NAILS AT 4" O.C AT EDGES AND 12" O.C AT FIELD (TABLE 23-II-I-1 UBC)	.....350 PLF
12.	3/8" WOOD STRUCTURAL PANEL WITH 8d COMMON NAILS AT 3" O.C AT EDGES AND 12" O.C AT FIELD (TABLE 23-II-I-1 UBC)	.....490 PLF
13.	3/8" WOOD STRUCTURAL PANEL WITH 8d COMMON NAILS AT 2" O.C AT EDGES AND 12" O.C AT FIELD (TABLE 23-II-I-1 UBC)	.....640 PLF
14.	1/2"(OR 15/32) WOOD STRUCTURAL PANEL WITH 10d COMMON NAILS AT 2" O.C AT EDGES AND 12" O.C AT FIELD (TABLE 23-II-I-1 UBC)	.....770 PLF
15.	1/2"(OR 15/32) STRUCT. I WOOD PANEL WITH 10d COMMON NAILS AT 2" O.C AT EDGES AND 12" O.C AT FIELD (TABLE 23-II-I-1 UBC)	.....870 PLF

NOTES:

A. WOOD STRUCTURAL PANEL: MATERIAL APPROVED BY APA, PFS/TECO OR PITTSBURG TESTING LABORATORIES (THIS INCLUDES OSB) THESE VALUES ARE FOR DOUG-FIR LARCH OR SOUTHERN PINE. OTHER LUMBER SPECIES MAY DIFFER IN SHEAR CAPACITIES.

B. PROVIDE 2X BLOCKING AT HORIZONTAL WOOD STRUCTURAL PANEL PANEL JOINTS.

C. WHERE WOOD STRUCTURAL PANEL IS APPLIED ON BOTH FACES OF WALL AND NAIL SPACING IS LESS THAN 6" O.C, PANEL JOINTS SHALL BE OFFSET TO FALL ON DIFFERENT FRAMING MEMBERS OR FRAMING SHALL BE 3X OR WIDER AND NAILS STAGGERED ON EACH SIDE.

D. FOR SHEAR WALLS 12 TO 15 USE THE FOLLOWING:
1) USE 3x MUDSILL
2) USE 3x MEMBER @ PANEL JOINTS & HORIZONTAL BLOCKING
3) NAILINGS SHALL BE STAGGERED

E. 10d SHORT BOX NAILS MAY BE USED IN LIEU OF 8d COMMON NAILS @ SHEAR WALLS ONLY.

F. 3" x 3" x 3/16" STEEL PLATE WASHERS ARE REQUIRED ON EACH ANCHOR BOLT. (UBC SECT. 1806.6.1)

HORIZONTAL:

ALL ROOF AND FLOOR SHEATHING TO BE EXPOSURE I OR EXTERIOR (TABLE 23-II-E-1 AND 23-II-H UBC)

ROOF: JOIST SPACING EQUAL TO OR LESS THAN 24" O.C: 15/32"WOOD STRUCTURAL PANEL PII 24/0, WITH 8d's AT 6" O.C AT EDGES AND BOUNDARIES, 12" O.C FIELD.

FLOOR: * JOIST SPACING EQUAL TO OR LESS THAN 16" O.C: 19/32" WOOD STRUCTURAL PANEL T&G SHTG, PII 32/16, w/10d's AT 6" O.C AT EDGES AND BOUNDARIES, 10" O.C FIELD.

JOIST SPACING EQUAL TO OR LESS THAN 20" O.C: 19/32" WOOD STRUCTURAL PANEL T&G SHTG, PII 40/20, w/10d's AT 6" O.C AT EDGES AND BOUNDARIES, 10" O.C FIELD.

JOIST SPACING EQUAL TO OR LESS THAN 24" O.C: 23/32" WOOD STRUCTURAL PANEL T&G SHTG, PII 48/24, w/10d's AT 6" O.C AT EDGES AND BOUNDARIES, 10" O.C FIELD.

* PANEL EDGES SHALL HAVE APPROVED T&G JOINTS OR SHALL BE SUPPORTED WITH BLOCKING NOT REQUIRED WHEN LIGHTWEIGHT CONCRETE IS PLACED OVER SUBFLOOR.

FRAMING LEGEND:

INDICATES SPAN AND DIRECTION OF ROOF JOISTS AND RAFTERS

INDICATES SPAN AND DIRECTION OF TRUSSES

INDICATES SPAN AND DIRECTION OF FLOOR JOISTS

INDICATES SPAN AND DIRECTION OF CEILING JOISTS

INDICATES SPAN AND DIRECTION OF DECK JOISTS (SLOPED AS REQUIRED)

A	2X6 AT 12" O.C
B	2X6 AT 16" O.C
C	2X6 AT 24" O.C
D	2X8 AT 12" O.C
E	2X8 AT 16" O.C
F	2X8 AT 24" O.C
G	2X10 AT 12" O.C
H	2X10 AT 16" O.C
J	2X10 AT 24" O.C
K	(2)2X10 AT 16" O.C
L	2X12 AT 12" O.C
M	2X12 AT 16" O.C
N	2X12 AT 24" O.C
P	(2)2X12 AT 16" O.C
T	TRUSS AT 24" O.C

I-JOIST TABLE

MARK	SPACING	SIZE & MANUFACTURER OPTIONS
Q-	I-JOIST @ 12" O.C.	a) 9 1/2" TJI / 150
R-	I-JOIST @ 16" O.C.	b) 9 1/2" LPI / 150
S-	I-JOIST @ 19.2" O.C.	c) 9 1/2" BCI / 450
U-	I-JOIST @ 12" O.C.	a) 11 7/8" TJI / 150
V-	I-JOIST @ 16" O.C.	b) 11 7/8" LPI / 150
W-	I-JOIST @ 19.2" O.C.	c) 11 7/8" BCI / 450
X-	I-JOIST @ 12" O.C.	a) 14" TJI / 250
Y-	I-JOIST @ 16" O.C.	b) 14" LPI / 250
Z-	I-JOIST @ 19.2" O.C.	c) 14" BCI / 450

G=L INDICATES (1) 1 3/4" x 11 7/8" GANGLAM LVL 1.8 E
GL INDICATES GANG-LAM LVL 1.8 E
M=L INDICATES (1) 1 3/4" x 11 7/8" MICRO=LAM
P=L (OR PSL) INDICATES PARALLAM

4 HEADERS AND BEAMS, REFER TO ENGINEERING CALCS.

■ ■ ■ INDICATES INTERIOR BEARING WALL

NOTE: APPLY SHEAR PRIOR TO FRAMING OF 4 PERPENDICULAR WALL AND/OR BOX-OUTS. (WHERE APPLICABLE)

REVISIONS	BY

ESI/FME, INC.
STRUCTURAL ENGINEERS
1800 E. 16TH STREET
SANTA ANA, CA 92701
PHONE: 714-835-2800
FAX: 714-835-2819

JN.-2459 11/30/00

THE ARTISAN COLLECTION
CATHEDRAL CITY, CALIFORNIA
FORD-DA VALL GROUP, LLC

DRAWN
CHECKED
DATE
DEC. 8, 2000
JOB NO.
2459
SHEET
S4-4
SHEET: OF:

FEB 28 2001

AutoCAD File: J:\Jobs\2459\2459S4.dwg Plotted at: Mon Feb 26 13:26:21 2001

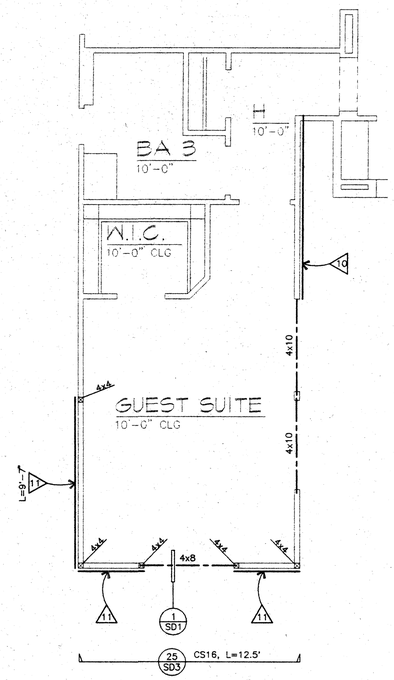

GUEST SUITE OPTION FRAMING PLAN

SCALE : 1/4" = 1'-0"

FOR ADDITIONAL AND SPECIFIC INFORMATION NOT SHOWN HERE REFER TO MAIN FRAMING PLAN

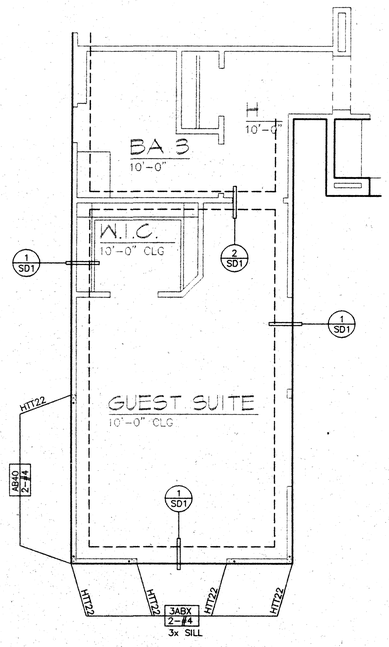

GUEST SUITE OPTION FOUNDATION PLAN

SCALE : 1/4" = 1'-0"

FOR ADDITIONAL AND SPECIFIC INFORMATION NOT SHOWN HERE REFER TO MAIN FOUNDATION PLAN

REVISIONS	BY

ESI/FME, INC.
STRUCTURAL ENGINEERS
1800 E. 16TH STREET
SANTA ANA, CA 92701
PHONE: 714-835-2800
FAX: 714-835-2819

JN.-2459 11/30/00

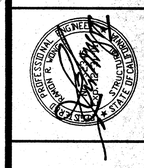

THE ARTISAN COLLECTION

CATHEDRAL CITY, CALIFORNIA
FORD-DA VALL GROUP, LLC

DRAWN	
CHECKED	
DATE	DEC. 8, 2000
JOB NO.	2459
SHEET	S4-5
SHEET:	OF:

FEB 28 2001

AutoCAD File: J:\Files\2459\2459S45.dwg Plotted at: Mon Feb 26,13 27:04 2001

GENERAL NOTES

1. THE GENERAL CONTRACTOR AND EACH SUBCONTRACTOR SHALL VERIFY ALL DIMENSIONS AND SITE CONDITIONS BEFORE STARTING WORK. THE ARCHITECT OR **ESI/FME, INC.** SHALL BE NOTIFIED OF ANY DISCREPANCY.
2. DIMENSIONING SHALL TAKE PRECEDENCE OVER SCALES SHOWN ON DRAWINGS. TYPICAL DETAILS AND GENERAL NOTES ARE MINIMUM REQUIREMENTS TO BE USED WHEN CONDITIONS ARE NOT SHOWN OTHERWISE.
3. NOTES AND DETAILS ON DRAWINGS SHALL TAKE PRECEDENCE OVER GENERAL NOTES AND TYPICAL DETAILS. WHERE NO DETAILS ARE SHOWN CONSTRUCTION SHALL CONFORM TO SIMILAR WORK ON PROJECT.
4. ALL WORK SHALL CONFORM TO THE MINIMUM STANDARDS OF THE 1997 EDITION OF THE UNIFORM BUILDING CODE, AND ANY OTHER REGULATING AGENCIES WHICH HAVE AUTHORITY OVER ANY PORTION OF THE WORK, INCLUDING THE STATE OF CALIFORNIA DIVISION OF INDUSTRIAL SAFETY, AND THOSE CODES AND STANDARDS LISTED IN THESE NOTES AND SPECIFICATIONS.
5. APPROVAL BY THE INSPECTOR DOES NOT MEAN APPROVAL OR ALOWABLE FAILURE TO COMPLY WITH THE PLANS AND SPECIFICATIONS. ANY DESIGN WHICH FAILS TO BE CLEAR OR IS AMBIGUOUS MUST BE REFERRED TO THE DESIGNER OR ENGINEER FOR INTERPRETATION OR CLARIFICATION.
6. SEE ARCHITECTURAL, ELECTRICAL AND MECHANICAL DRAWINGS FOR PITS, TRENCHES, ROOF OPENINGS, DEPRESSIONS ETC. NOT SHOWN ON STRUCTURAL DRAWINGS.
7. VIBRATION EFFECTS OF MECHANICAL EQUIPMENT HAVE NOT BEEN CONSIDERED BY **ESI/FME, INC.**
8. THE DESIGN ADEQUACY AND SAFETY OF ERECTION BRACING, SHORING, TEMPORARY SUPPORTS, ETC. IS SOLE RESPONSIBILITY OF THE CONTRACTOR, AND HAS NOT BEEN CONSIDERED BY **ESI/FME, INC.** THE CONTRACTOR IS RESPONSIBLE FOR THE STABILITY OF THE STRUCTURE PRIOR TO THE APPLICATION OF ALL SHEAR WALLS, ROOF AND FLOOR DIAPHRAGMS AND FINISH MATERIALS. HE SHALL PROVIDE THE NECESSARY BRACING TO PROVIDE STABILITY PRIOR TO THE APPLICATION OF THE AFOREMENTIONED MATERIALS. OBSERVATION VISITS TO THE SITE BY **ESI/FME, INC.** SHALL NOT INCLUDE INSPECTION OF THE ABOVE ITEMS.
9. CONTRACTOR SHALL INVESTIGATE SITE DURING CLEARING AND EARTHWORK OPERATIONS FOR FILLED EXCAVATIONS OR BURIED STRUCTURES SUCH AS CESSPOOLS, CISTERNS, FOUNDATIONS, ETC. IF ANY SUCH STRUCTURES ARE FOUND, **ESI/FME, INC.** AND THE SOIL ENGINEER SHALL BE NOTIFIED IMMEDIATELY.
10. CONSTRUCTION MATERIALS SHALL BE SPREAD OUT IF PLACED ON FRAMED FLOORS OR ROOF. LOAD SHALL NOT EXCEED THE DESIGN LIVE LOAD PER SQUARE FOOT. PROVIDE ADEQUATE SHORING AND/OR BRACING WHERE STRUCTURE HAS NOT ATTAINED DESIGN STRENGTH.
11. CONSTRUCTION DOCUMENTS IDENTIFIED AS "BID SET" ON ANY OR ALL SHEETS MAY BE SUBJECT TO REVIEW. THIS REVIEW MAY RESULT IN CHANGES WHICH MAY BE MADE TO THE PLANS PRIOR TO THE ISSUANCE OF THE FINAL CONSTRUCTION SET WHICH WILL CONTAIN NO "BID SET" DESIGNATIONS. CONSTRUCTION DOCUMENTS IDENTIFIED AS "BID SET" ARE NOT CONSTRUED AS BEING THE COMPLETED OR FINAL DRAWINGS AND THEY SHOULD NOT IN ANY WAY BE USED AS SUCH.
12. ALL GUARD RAILS AND HANDRAILS SHALL BE DESIGNED TO WITHSTAND A LATERAL LOAD OF 20 POUNDS PER LINEAL FOOT APPLIED HORIZONTALLY AT RIGHT ANGLES TO TOP RAIL. (50 PLF FOR COMMERCIAL)
13. THESE PLANS ARE INTENDED SOLELY FOR THE USE OF THE OWNER FOR CONSTRUCTION AND ARE EXPRESSLY NOT INTENDED FOR USE IN MARKETING. EXTERIOR ELEVATIONS AND OTHER DETAILS ON THESE PLANS ARE ONLY A REPRESENTATION AND MAY VARY SIGNIFICANTLY FROM THE ACTUAL CONSTRUCTION.
14. SLAB ON GRADE REQUIREMENTS TO BE PER THE SOIL ENGINEERS RECOMENDATIONS SOLELY. THE SLAB ON GRADE IS A NON-STRUCTURAL ITEM AND THEREFORE HAS NOT BEEN DESIGNED BY THE STRUCTURAL DESIGN ENGINEER.
15. IN THE EVENT OF CONFLICT BETWEEN THE ARCHITECTURAL GENERAL NOTES AND THE STRUCTURAL GENERAL NOTES (SHT SD1), THE MORE STRINGENT REQUIREMENT SHALL GOVERN.

REINFORCING STEEL

1. ALL REINFORCING SHALL BE ASTM A-615 GRADE 40 FOR #4 BARS AND SMALLER. ALL REINFORCING SHALL BE ASTM A-615 GRADE 60 FOR #5 BARS AND LARGER. WELDED WIRE FABRIC TO BE ASTM A-185, LAP 1-1/2 SPACES, 9" MIN. FOR STRUCTURAL SLABS ALL REINFORCING #5 AND LARGER TO BE ASTM A-615 GRADE 60
2. ALL BARS SHALL BE DEFORMED AS PER ASTM A-305.
3. ALL BARS SHALL BE CLEAN OF LOOSE FLAKY RUST, GREASE OR OR OTHER MATERIALS LIKELY TO IMPAIR BOND.
4. ALL BENDS SHALL BE MADE COLD.
5. SPLICING OF BARS SHALL HAVE LAPPING OF 30 DIA. OR 2'-0" MIN. IN ALL CONTINUOUS REINFORCEMENT OF FOOTINGS AND CONCRETE WALLS, EXCEPT AS NOTED ON PLANS. MASONRY REINFORCEMENT SHALL HAVE LAPPINGS OF 40 DIA. OR 2'-0" WHICHEVER IS GREATER.
6. ALL REINFORCING BARS SHALL BE ACCURATELY AND SECURELY PLACED BEFORE POURING CONCRETE.
7. CONCRETE PROTECTION FOR REINFORCEMENT SHALL BE AT LEAST EQUAL TO THE DIAMETER OF THE BARS. COVER SHALL BE AS FOLLOW:

A.	POURED AGAINST EARTH		3"
B.	POURED AGAINST FORM BELOW GRADE		2"
	#6 AND LARGER	2"	
	#5 AND SMALLER	1 1/2"	
C.	FORMED SLABS		1"
D.	SLABS ON GRADE (FROM TOP OF SLAB)		1"
E.	COLUMNS AND BEAMS TO MAIN BARS		2"
F.	WALLS – EXPOSED TO WEATHER		2"
	NOT EXPOSED TO WEATHER, #11 AND SMALLER		1"
	#14 AND #18		1 1/2"

CONCRETE

1. ALL CONCRETE SHALL CONFORM TO THE LATEST EDITION OF THE UNIFORM BUILDING CODE.
2. CONCRETE SHALL BE DESIGNED AND TESTED AS OUTLINED IN THE SPECS.
3. ALL CEMENT SHALL CONFORM TO ASTM C-150.

TABLE-19-A-3 REQUIREMENTS FOR CONCRETE EXPOSED TO SULFATE-CONTAINING SOLUTION

SULFATE EXPOSURE	WATER-SOLUBLE SULFATE (SO_4)IN SOIL, PERCENTAGE BY WEIGHT	CEMENT TYPE	NORMAL WEIGHT AGGREGATE Maximum Water-cementitious Materials Ratio, by Weight-Normal Weight Aggregate Concrete	LIGHTWEIGHT AGGREGATE CONC. f'c Normal Weight and Lightweight Aggregate 1 Concrete, psi
Negligible	0.00-0.10	-	-	-
Moderate 2	0.10-0.20	II, IP(MS), 15 (MS)	0.50	4,000
Severe	0.20-2.00	V	0.45	4,500
Very Server	OVER 2.00	V plus pozzolan 3	0.45	4,500

1 – A lower water cementitious materials ratio of higher strength maybe required for low permeability or for protection against corrosion of embedded items or freezing and thawing(Table 19-A-2)
2 – Seawater.
3 – Pozzolan that has been determined by test service record to improve sulfate resistance when used in concrete containing type 5 cement

4. FINE AND COARSE AGGREGATE SHALL CONFORM TO ASTM C-33 FOR STANDARD WEIGHT CONCRETE AND ASTM C-330 FOR LIGHT WEIGHT CONCRETE.
5. ALL AGGREGATE SHALL BE COMPARABLE TO "SAN GABRIEL VALLEY" AGGREGATE. THE SHRINKAGE SHALL BE AS PER ASTM C-157 WITH THE AVERAGE DRYING SHRINKAGE AT 28-DAYS NOT EXCEEDING 0.04%.
6. DRYPACK SHALL BE COMPOSED OF ONE PART PORTLAND CEMENT TO NOT MORE THAN THREE PARTS SAND.
7. ANCHOR BOLTS, HOLDOWN BOLTS, DOWELS, INSERTS, ETC. SHALL BE SECURELY TIED IN PLACE PRIOR TO POURING CONCRETE.
8. CONCRETE SHALL BE CURED BY KEEPING CONTINUOUSLY WET FOR 10-DAYS OR BY AN APPROVED CURING COMPOUND.
9. REFER TO ARCHITECTURAL, MECHANICAL, ELECTRICAL AND PLUMBING DRAWINGS FOR MISCELLANEOUS ITEMS TO BE CAST INTO CONCRETE AND FLOOR DEPRESSIONS, PITS, ETC.
10. SEE ARCHITECTURAL DRAWINGS FOR LOCATIONS OF EXPANSION JOINTS, SCORING, ETC. FOR CONCRETE WALKS AND SLABS.
11. ALL STRUCTURAL CONCRETE F'c = 3,000 PSI
    ALL SLAB-ON-GRADE F'c = 2,500 PSI
    ALL CONTINUOUS FOOTINGS AND PADS F'c = 2,500 PSI
    ALL CONCRETE SHALL REACH MINIMUM COMPRESSIVE STRENGTH 28 – DAYS.
12. ALL CONCRETE WITH F'c GREATER THAN 2,500 PSI SHALL HAVE SPECIAL INSPECTION PER SECTION 1701 OF THE UNIFORM BUILDING CODE UNLESS NOTED OTHERWISE.
13. CONCRETE FOR SLAB ON GRADE SHALL HAVE A MAXIMUM OF 4" OF SLUMP PER ASTM C-143. 5 SACKS OF CEMENT PER CUBIC YARD OF CONCRETE. CEMENT ASTM C-150 TYPE 1 OR 2

STRUCT. STEEL

1. THE DEPICTIONS OF ALL MISCELLANEOUS FABRICATED METAL PRODUCTS SHOWN HEREON ARE NOT INTENDED TO BE USED AS FABRICATION SHOP DRAWINGS. THE METAL FABRICATOR SHALL BE RESPONSIBLE FOR ALL METAL FABRICATION DESIGNS IN ACCORDANCE WITH ALL NATIONAL, STATE AND LOCAL CODES AND POLICIES AS WELL AS THE AMERICAN INSTITUTE OF STEEL CONSTRUCTION AND ANY OTHER INDUSTRY STANDARDS. ALL METAL FABRICATION DESIGNS ARE TO BE SUBMITTED TO AND APPROVED BY THE LOCAL BUILDING INSPECTION DEPARTMENT RESPONSIBLE FOR THE PROJECT PRIOR TO FABRICATION. ALL DIMENSIONS, DETAILS, ETC., SHOWN HEREON ARE INTENDED TO BE SCHEMATIC AND THE DESIGN IS TO BE VERIFIED WITH ALL AFFECTED SUBCONTRACTORS, FIELD CONDITIONS, AND THE REQUIREMENTS OF ALL GOVERNING AGENCIES AND FABRICATION STANDARDS.
   FABRICATION AND ERECTION OF STRUCTURAL STEEL SHALL BE IN ACCORDANCE WITH "SPECIFICATION FOR THE DESIGN, FABRICATION AND ERECTION OF STRUCTURAL STEEL FOR BUILDINGS." AISC, CURRENT EDITION. STEEL TO CONFORM TO ASTM A-36.
2. ALL WELDING SHALL BE PERFORMED BY CERTIFIED WELDERS, USING THE ELECTRIC SHIELDING PROCESS AND CONFORMING TO AWS SPECIFICATIONS, E70XX ELECTRODE.
3. ALL STRUCTURAL STEEL SHALL BE FABRICATED IN THE SHOP OF A LICENSED FABRICATOR AND SHOP DRAWINGS SHALL BE SUBMITTED TO **ESI/FME, INC.** THROUGH THE ARCHITECT FOR APPROVAL PRIOR TO FABRICATION. STEEL FABRICATOR SHALL SUBMIT SHOP DRAWINGS TO THE GENERAL CONTRACTOR AND OWNER FOR REVIEW PRIOR TO FABRICATION. ANY PROPOSED DEVIATION, ADDITION OR QUESTIONS SHALL BE NOTED CONSPICUOUSLY AND CLEARLY ON THE SHOP DRAWINGS. STEEL FABRICATOR SHALL FIELD CHECK ALL DIMENSIONS PRIOR TO ERECTION TO PROVIDE FOR A PROPER FIT.
   ALL FIELD WELDING EXCEPT MINOR AND TACK WELDING SHALL BE CONTINUOUSLY INSPECTED BY AN APPROVED WELDING INSPECTOR.
4. USE 3/4" ROUND MACHINE BOLTS, 13/16" ROUND HOLES, FOR ALL CONNECTIONS, UNLESS OTHERWISE SHOWN. ALL BOLTS SHALL CONFORM TO ASTM A-307 FOR UNFINISHED BOLTS, EXCEPT WHERE SPECIFICALLY NOTED AS HIGH STRENGTH BOLTS WHICH SHALL CONFORM TO ASTM A-325 OR ASTM A-490. HI TENSILE BOLTS SHALL BE THE FRICTION TYPE AND THERE SHALL BE NO PAINT, OIL, LACQUER, OR GALVANIZING BETWEEN THE CONTACT SURFACE. HIGH STRENGTH BOLTS REQUIRE SPECIAL INSPECTION PER SEC. 1701.5.6
5. ALL STEEL EXPOSED TO WEATHER SHALL BE HOT-DIPPED GALVANIZED AFTER FABRICATION.
6. PIPE COLUMNS SHALL CONFORM TO ASTM A-53-B (TYPE E OR S)
7. TUBE COLUMNS SHALL CONFORM TO ASTM A-501 OR A-500 GRADE B.
8. WHERE FINISH IS ATTACHED TO STRUCTURAL STEEL PROVIDE 1/2" BOLT HOLES AT 4'-0" O/C FOR ATTACHMENT OF NAILERS. SEE ARCHITECTURAL DRAWINGS FOR FINISHES. (OR NELSON STUDS 1/2" X 3" CPL).
9. NONDESTRUCTIVE TESTING PER 97 UBC SECTION 1703 ON STEEL MOMENT CONNECTION BETWEEN STEEL BEAM AND STEEL COLUMN, ALL FULL PENETRATION GROOVE WELDS CONTAINED IN JOINTS AND SPLICES SHALL BE TESTED 100 PERCENT EITHER BY ULTRASONIC TESTING OR BY RADIOGRAPHY.

LUMBER/CARPENTRY

1. ALL STRUCTURAL LUMBER SHALL BE GRADED IN ACCORDANCE WITH THE STANDARD GRADING RULES NO.16 FOR WEST COAST LUMBER AND UBC STANDARD NO. 23-1.
2. ALL WOOD BEARING ON CONCRETE OR MASONRY SHALL BE PRESSURE TREATED DOUGLAS FIR OR REDWOOD.
3. HOLES FOR BOLTS SHALL BE BORED WITH A BIT 1/32" TO 1/16" LARGER THAN THE NOMINAL BOLT DIAMETER.
4. ALL BOLTS SHALL BE RE-TIGHTENED PRIOR TO APPLICATION OF PLYWOOD, PLASTER, ETC.
5. STRUCTURAL MEMBERS SHALL NOT BE CUT FOR PIPES, ETC. UNLESS SPECIFICALLY NOTED OR DETAILED.
6. 2X SOLID BLOCKING SHALL BE PLACED BETWEEN JOISTS OR RAFTERS AT ALL SUPPORTS, EXCEPT WHEN LEDGERED.
7. CROSS-BRIDGING SHALL BE PROVIDED AT 8'-0" O.C. MAX. FOR ALL FLOOR JOISTS OVER 10" IN DEPTH AND ALL ROOF JOISTS OVER 10" DEPTH. USE SOLID BLOCKING OR AN APPROVED TYPE METAL BRIDGING.
8. ALL STRUCTURAL PLYWOOD SHALL BE STRUCTURAL II OR C-D GRADE WITH EXTERIOR GLUE UNLESS NOTED OTHERWISE AND CONFORM TO PS-1-95. EACH SHEET SHALL BE INDENTIFIED BY A REGISTERED STAMP D.F.P.A OR A.P.A.
9. ALL BOLTS BEARING ON WOOD SHALL HAVE STANDARD CUT WASHERS UNDER HEAD AND NUT UNLESS NOTED OTHERWISE.
10. ALL METAL ANCHORS, FASTENERS AND CONNECTORS ETC. SHALL BE FROM SIMPSON STRONG-TIE (TM). SUBSTITUTIONS MUST BE PRE-APPROVED IN WRITING BY ESI/FME.
11. ALL STRUCTURAL LUMBER SHALL BE DOUGLAS FIR-LARCH, 19% MAX. MOISTURE CONTENT, OF THE FOLLOWING GRADES UNLESS NOTED OTHERWISE :

2X4 STUDS (UP TO 10')...........	"STUD GRADE" OR BETTER
2X4 STUDS (OVER 10').............	"CONSTRUCTION GRADE"
2X PLATES & 3X PLATES......	"STANDARD GRADE" OR BETTER
2X6 STUDS..	NO.2
2X JOIST	NO.2
BEAMS AND STRINGERS	
4X10 AND SMALLER....................	NO.2
4X12 AND LARGER.......................	NO.1
6X AND 8X...	NO.1
POST AND TIMBERS....................	NO.1
ROOF PLANKING AND DECKING..COM.DEX.	
BOARD SHTG. AND STRIPPING..SUITABLE FOR INTENDED USE.	

1991 NDS STRESS VALUES FOR DOUGLAS FIR-LARCH:

SINGLE/REPETITIVE
2X4 #2: Fb= 1315/1510 PSI ; fv=95 PSI E=1.6x10[6]
2X6 #2: Fb= 1140/1310 PSI
2X8 #2: Fb= 1055/1210 PSI
2X10 #2: Fb= 965/1105 PSI
2X12 #2: Fb= 875/1005 PSI
2X14 #2: Fb= 790/ 905 PSI
4X6 #2: Fb= 1140 PSI
4X8 #2: Fb= 1140 PSI
4X10 #2: Fb= 1050 PSI
4X12 #1: Fb= 1100 PSI
4X14 #1: Fb= 1000 PSI
4X16 #1: Fb= 1000 PSI
6X10 #1: Fb= 1350 PSI
6X12 #1: Fb= 1327 PSI

12. ALL NAILING TO BE PER TABLE NUMBER 23-II-B-1 OF THE LATEST UNIFORM BUILDING CODE, UNLESS NOTED OTHERWISE.
13. PLYWOOD FLOOR AND ROOF SHEATHING SHALL BE LAID CONTINUOUS OVER TWO OR MORE SPANS WITH FACE GRAIN PERPENDICULAR TO SUPPORTS (UNLESS SHOWN OTHERWSE). STAGGER ALL PLYWOOD PANELS A MINIMUM OF 4'-0".
14. WHENEVER LATERAL BRACING OF WEB MEMBER IN TRUSSES IS REQUIRED, THE LATERAL BRACE MUST END ON AN EXTERIOR BEARING WALL.
15. FRAMING CONTRACTOR SHALL PROVIDE BACKING AS REQUIRED FOR ALL LIGHT FIXTURES, CABINETS, WARDROBES, TOWEL BARS, AND HANDRAILS AS REQUIRED AND REQUESTED BY GENERAL CONTRACTOR.
16. EXTERIOR WOOD POSTS AND COLUMNS SUPPORTED BY A CONCRETE SLAB SHALL BE INSTALLED A MINIMUM OF 6" ABOVE EXPOSED EARTH AND AT LEAST 1" ABOVE SLAB ON METAL POST BASES. (EXCEPTION: POSTS OR COLUMNS OF APPROVED WOOD WITH NATURAL RESISTANCE TO DECAY OR TREATED WOOD). POSTS OR COLUMNS RESTING ON CONCRETE PIERS SURROUNDED BY EXISTING GRADE SHALL BE A MINIMUM OF 8" ABOVE ADJACENT GRADE PER U.B.C. SECT. 2306.5. ALL ISOLATED INTERIOR AND EXTERIOR WOOD POSTS ATTACHED DIRECTLY TO CONCRETE SHALL BE SECURED WITH SIMPSON 'PB' OR EQUIVALENT.
17. PROVIDE 2x4 FLAT HEADERS AT ALL INTERIOR NON-BEARING OPENINGS UP TO 36 INCHES IN WIDTH AND 4x4 HEADERS FOR OPENINGS 3 TO 6 FEET IN WIDTH.
18. PROVIDE MINIMUM 1/2" CLEARANCE (VOID SPACE) FROM TOP OF ALL INTERIOR NON-BEARING PARTITIONS TO ROOF AND CEILING FRAMING ABOVE.
19. ALL EXTERIOR WALLS ADJACENT TO VAULTED CEILINGS SHALL BE BALLOON FRAMED WITH CONTINUOUS STUDS TO BOTTOM CHORD OF TRUSS OR RAFTER.
20. WHEN PLYWOOD SIDING IS USED AS AN EXTERIOR OR INTERIOR WALL COVERING, PROVIDE SOLID BLOCKING AT ANY HORIZONTAL JOINTS BETWEEN SOLE PLATE AND ANY TOP PLATE. "Z" BAR METAL SHALL BE USED AT EXTERIOR HORIZONTAL JOINTS.
21. INSTALL FIREBLOCKS TO CUT OFF ALL HORIZONTAL AND VERTICAL DRAFT OPENINGS BETWEEN TWO STORIES AND ROOF ATTIC SPACES. FIREBLOCKS SHALL BE OF 2 INCH NOMINAL THICKNESS. LOCATION OF FIREBLOCKS SHALL INCLUDE:
    A. STUD WALLS AT FURRED SOFFITS, CEILING AND FLOOR LEVELS.
    B. AROUND TOP, BOTTOM, SIDES AND ENDS OF SLIDING POCKET DOORS
    C. BETWEEN STAIR STRINGERS AT TOP AND BOTTOM OF RUN AND BETWEEN STUDS IN A WALL PARALLEL AND ADJOINING RUN OF STAIRS.
22. FASTENING OF MULTIPLE MEMBERS:
    DOUBLE & TRIPLE JOISTS;
    16d NAILS AT 12" O.C STAGGERED (BOTH SIDES FOR TRIPLES).
    FOUR OR MORE JOISTS;
    1/2" DIA. M.B's AT 18" O.C STAGGERED.
    4X OR LARGER BEAMS;
    1/2" DIA. M.B's AT 12" O.C STAGGERED.
23. ALL ROUGH OR RESAWN BEAMS ARE TO BE FREE OF GRADING STAMP LABELS AND FREE OF HEART CENTER.
24. ALL HANGING JOISTS SHALL BE HUNG WITH SIMPSON "LUS" HANGERS U.N.O., AND SIMPSON "ITT" FOR TJI's, U.N.O.
25. ALL BEARING WALLS ON A WOOD FLOOR ARE TO BE SUPPORTED WITH DOUBLE JOISTS OR SOLID BLOCKING UNLESS NOTED OTHERWISE.
26. ALL BEAMS TO BE SUPPORTED WITH FULL BEARING, U.N.O
27. ROOF SHEATHING IS TO CONTINUE UNDER CALIFORNIA FRAMING, TYP.
28. APPLY SHEAR WALL PLYWOOD PRIOR TO ALL BOX-OUTS, FUR-OUTS, SOFFITS OR ANY OTHER FRAMING THAT MAY INTERRUPT CONTINUITY OF THE PLYWOOD.
29. PROVIDE FURRING AS NEEDED TO ALIGN NON-SHEAR WALLS WITH SHEAR WALLS.
30. PROVIDE 4X OR DOUBLE 2X MEMBERS UNDER SOLE PLATE NAILING AT 2" O.C
31. DOUBLE TOP PLATES w/MIN. 48" LAP SPLICES TO BE PROVIDED w/MIN (8) 16d's PER TOP PLATE SPICE.
32. TOP PLATE BREAKS ARE SHALL OCCUR OVER A STUD OR POST.
33. SOLID BLOCKING BETWEEN PERPENDICULAR JOIST AT BEARING AND AT SHEAR WALLS.
34. ALL EXPOSED BEAMS AND HEAVY TIMBER RECOMMENDED TO BE FREE OF HEART CENTER.
35. ALL ISOLATED POSTS AND BEAMS TO HAVE SIMPSON PB's AND/ OR BC's MINIMUM, UNLESS NOTED OTHERWISE.
36. ALL SIMPSON HD, PA, AND CB HOLDOWNS TO BE FASTENED TO 4x4 POST MIN., U.N.O.
37. ALL EXTERIOR WALLS ARE TO BE SECURED WITH MIN. 1/2" DIA. x 10" ANCHOR BOLTS AT 72" O.C., U.N.O. PROVIDE 5/8" DIA. ANCHOR BOLTS AT ZONE 4.
38. ALL INTERIOR WALLS TO BE SECURED WITH SHOT PINS PER MANUFACTURER 'S RECOMMENDATION, U.N.O. CALCULATIONS GOVERN IN ALL CASES. RECOMMEND RAMSET/REDHEAD 1524SD AT 24" O.C. PER ICBO REPORT NO. 1147.
39. ALL CONVENTIONAL FRAME PORTIONS OF STRUCTURE ARE TO BE CONSTRUCTED PER SECTION 2320 OF THE UNIFORM BUILDING CODE, U.N.O.
40. ALL SHOP DRAWINGS ARE TO BE REVIEWED BY THE CONTRACTOR AND THE ARCHITECT PRIOR TO SUBMITTAL FOR ENGINEER REVIEW.
41. TRUSS MANUFACTURER TO PROVIDE CALCULATIONS, SHOP DRAWINGS, DETAILS, TRUSS HANGERS, BRIDGING AND ERECTION BRACING.
42. PROVIDE DOUBLE 2X SOLE PLATES WITH SOLE PLATE NAILING AS SPECIFIED ON THE PLANS AT BOTH PLATES WHERE 1 1/2" LIGHT WEIGHT CONCRETE IS USED AT THE FLOOR.
43. WHERE BOTH TOP PLATES ARE BROKEN, STRAP WITH ST6224 MIN. U.N.O.
44. COMMON NAILS SHALL BE USED FOR ALL PLY SHEATHING TOP PLATE SPLICES & SOLE PLATE NAILING. ALL HARDWARE SHALL BE INSTALLED WITH NAILS PER THE MANUFACTURERS SPECIFICATIONS AND RECOMMENDATIONS.

GLULAMS/MFR. WD. PROD.

1. ALL GLUED LAMINATED MEMBERS SHALL BE MADE OF 1-1/2" DOUGLAS FIR LAMINATIONS, COMBINATION 24-F PER AITC.
2. IND. APP. GRADE: Fb=2400 PSI; Fv=165 PSI; E=1.8X10[6] PSI
3. INDUSTRIAL APPEARANCE GRADE SHALL BE USED, WITH MOISTURE CONTENT BETWEEN 7 – 14 PERCENT, UNLESS NOTED OTHERWISE.
4. FABRICATOR SHALL BE A MEMBER OF AITC AND ALL FABRICATION SHALL BE PERFORMED IN ACCORDANCE WITH THE LATEST EDITION OF "TIMBER CONSTRUCTION STANDARD" BY A.I.T.C.. LUMBER SHALL BE MARKED WITH AN AITC QUALITY MARK INDICATING CONFORMANCE WITH THE COMMERCIAL STANDARD "STRUCTURAL GLUED LAMINATED LUMBER
5. GLUED LAMINATED MEMBERS SHALL BE ACCOMPANIED BY A CERTIFICATE OF INSPECTION. CONTRACTOR SHALL BEAR EXPENSES OF INSPECTION AND TESTS. A CERTIFICATE OF INSPECTION SHALL BE SUBMITTED TO THE BUILDING DEPARTMENT.
6. THE FABRICATOR SHALL SUBMIT COMPLETE SHOP DRAWINGS TO BUILDING DEPARTMENT AND **ESI/FME, INC.** FOR APPROVAL PRIOR TO FABRICATION.
7. ALL GLUED LAMINATED BEAMS WILL HAVE A STANDARD CAMBER BASED ON A RADIUS=1600 UNLESS NOTED OTHERWISE.
8. PARALLAM PSL 2.0E BY TRUS JOIST MACMILLAN PER ICBO NO. NER 481 fb=2900 PSI; fv=290 PSI; E=2.0 x 10[6] PSI
   VERSA-LAM PSL 2.0 E BY BOISE CASCADE PER ICBO NO. NER-422 fb=2800 PSI, fv=285 PSI; E=2.0 x 106 PSI
   PREMIER PLUS GLULAM BY WILLAMETTE INDUSTRIES PER ICBO NO. NER-486 fb=2800 PSI(MIN.); fv=270 PSI; E=2.1 x 106 PSI
9. PROVIDE MULTIPLE 2x4 SQUASH BLOCKS UNDER BEARING POINT LOAD FROM ABOVE TO TOP PLATES BELOW AT FLOOR LEVEL.
10. TRUS JOIST MAC MILLAN PRODUCTS PER ICBO NOS. NER 481 & PFC-5381
    LOUISIANA PACIFIC PRODUCTS PER ICBO NO. PFC-3754
    BOISE CASCADE PRODUCTS PER ICBO NOS. PFC-4665 & NER-442
    WILLAMETTE INDUSTRIES PRODUCTS PER ICBO NO. NER-475 AND NER-486
11. PROVIDE DOUBLE I-JOISTS OR DOUBLE I-JOIST BLOCKS WHEN 16d SOLE PLATE NAILING IS LESS THAN 4" O.C. AT SHEAR WALL ABOVE.
12. REFER TO I-JOIST MANUFACTURER SPECIFICATION FOR DRILLING OF HOLES THRU I-JOIST WEB.

FOUNDATION/SITEWORK

1. THE FOUNDATION DESIGN IS BASED ON THE FOUNDATION INVESTIGATION BY SOIL REPORT SUBMITTED:
   PER: Earth Systems Southwest
   PROJECT NO. : 07653-01 / 00-04-743
   DATE : April 12, 2000.
2. THE ALLOWABLE SOIL BEARING VALUE IS 1500 PSF FOR CONTINUOUS FOOTINGS.
3. ALL SITE PREPARATION, EXCAVATION AND COMPACTION SHALL BE DONE UNDER THE SUPERVISION OF THE SOIL ENGINEER.
4. SEPARATE PERMITS SHALL BE OBTAINED FOR ALL FENCES AND WALLS, AS REQUIRED.
5. PROVIDE NON-EXPANSIVE FILL AS REQUIRED TO LEVEL PAD.
6. SURFACE WATER WILL DRAIN AWAY FROM BUILDING. DRAINAGE SHALL BE 2% FROM BUILDING TO SWALE LINE. SWALE SHALL DRAIN AT 1% (MIN.) FROM REAR OF BUILDING TO STREET.
7. THERE SHALL BE NO UTILITY TRENCH NEAR THE BUILDING FOUNDATION WHICH EXTEND DEEPER THAN A 45 DEGREE LINE PROJECTED DOWN AND AWAY FROM THE BOTTOM OUTSIDE CORNER OF ANY FOOTING.
8. PROVIDE 10 MIL VISQUEEN U.N.O. UNDER SLAB (EXCEPTION: GARAGE SLAB AS RECOMMENDED BY SOILS REPORT).
9. ALL HOLDOWN ANCHORS, POST BASES AND HOLDOWN BOLTS SHALL BE TIED INTO PLACE PRIOR TO FOUNDATION INSPECTION.
10. PLACE 20'-0" REBAR IN FOUNDATION AT SERVICE LOCATIONS. STUB UP REBAR ABOVE THE FLOOR BY ELECTRIC SERVICE METERS.
11. FOR THE LOCATION OF CONTROL JOINTS, REFER TO THE FOUNDATION PLAN. (ZIP STRIP OR EQUAL). MINIMUM OF 20'-0" O.C. EACH WAY IS RECOMMENDED.
12. DRIVEWAY PAVING SHALL BE 4" PORTLAND CEMENT CONCRETE. (5 SACKS MIN.).
13. FOR POST-TENSION SLAB, REFER TO APPROVED PLANS PREPARED BY OTHERS.
14. MINIMUM SLAB REINFORCEMENT AND PAD REQUIREMENT SHALL CONFORM TO THE SOILS ENGINEER'S RECOMMENDATIONS, U.N.O..

MASONRY

1. ALL MASONRY WORK SHALL CONFORM TO THE LATEST EDITION THE UNIFORM BUILDING CODE.
2. CONCRETE BLOCK SHALL BE OF SIZES SHOWN ON ARCHITECTURAL DRAWINGS AND/OR CALLED FOR IN SPECS. AND CONFORM TO ASTM C90-86, GRADE "N-I" NORMALWEIGHT UNITS WITH MAXIMUM LINEAR SHRINKAGE OF 0.06 % f'm = 1500 PSI GROUTED REINFORCED CELLS.
3. MORTAR MIX SHALL BE COMPOSED OF ONE PART PORTLAND CEMENT AND THREE PARTS SAND AND NOT LESS THAN 1/4 PART NOR MORE THAN 1/2 PART LIME PUTTY FOR TYPE 'S' MORTAR. MINIMUM COMPRESSION STRENGTH TO BE f'c = 2000 PSI.
4. GROUT MIX SHALL BE COMPOSED OF ONE PART PORTLAND CEMENT TO 2.1 TO 3.0 MAX PARTS SAND AND NOT LESS THAN TWO PARTS PEA GRAVEL, MAX. GROUT LIFT = 4'-0' SPECIAL INSPECTIONS SHALL BE REQUESTED FOR HIGH LIFT GROUTING. MINIMUM COMPRESSION STRENGTH TO BE f'c = 2000 PSI.
5. PROVIDE CLEANOUT OPENINGS AT BOTTOM OF ALL VERTICALLY GROUTED CELLS IF GROUT LIFT EXCEEDS 4'-0'.
6. ALL REINFORCING SHALL HAVE A MINIMUM COVERAGE OF 1/2" GROUT.
7. BOLTS SHALL BE GROUTED WITH 1" OF GROUT BETWEEN BOLT AND MASONRY.
8. NO PIPES OR DUCTS SHALL BE PLACED IN MASONRY WALLS UNLESS SPECIFICALLY NOTED OR DETAILED.
9. DOWELS IN CONCRETE FOR MASONRY WALLS SHALL BE THE SAME SIZE AND SPACING AS MASONRY WALL REINFORCING.
10. ALL MASONRY, EXCEPT VENEER, SHALL BE REINFORCED GROUTED MASONRY, GROUT CELLS CONTAINING REINFORCING UNLESS NOTED OTHERWISE. GROUT SOLID ALL MASONRY RETAINING EARTH UP TO 6" ABOVE RETAINING WALL.
11. ALL VERTICAL REINFORCING IN MASONRY WALLS NOT RETAINING EARTH SHALL BE LOCATED IN THE CENTER OF THE WALL, U.N.O.
12. REINFORCING SHALL BE SECURELY HELD AND BRACED IN PLACE TO PREVENT MOVEMENT WHILE PLACING MASONRY.
13. MASONRY TO HAVE SPECIAL INSPECTION PER SECTION 1702 OF THE UBC WHEN SPECIFIED.

WOOD TRUSSES

1. MANUFACTURER SHALL SUPPLY TO THE ARCHITECT/ENGINEER AND THE BUILDING DEPARTMENT, CALCULATIONS AND SHOP DRAWINGS FOR APPROVAL PRIOR TO FABRICATION. ALL CALCULATIONS AND SHOP DRAWINGS SHALL BE SIGNED BY A CALIFORNIA REGISTERED PROFESSIONAL ENGINEER. IT SHALL BE THE RESPONSIBILITY OF THE MANUFACTURER TO OBTAIN BUILDING DEPARTMENT APPROVAL FOR CALCULATIONS AND SHOP DRAWINGS PRIOR TO FABRICATION.
2. TRUSSES SHALL BE DESIGNED IN ACCORDANCE WITH THE LATEST LOCAL BUILDING CODE FOR ALL LOADS IMPOSED, INCLUDING LATERAL LOADS AND MECHANICAL EQUIPMENT LOADS.
3. ALL CONNECTORS SHALL BE ICBO APPROVED AND OF ADEQUATE STRENGTH TO RESIST STRESSES DUE TO THE LOADINGS INVOLVED.
4. TOTAL LOAD DEFLECTIONS SHALL BE LIMITED TO L/240
5. CROSS BRIDGING AND/OR BRACING SHALL BE PROVIDED AND DETAILED AS REQUIRED TO ADEQUATELY BRACE ALL TRUSSES.

LATERAL SHEAR NOTES:

(1997 U.B.C ; SEISMIC ZONE 4)

FRAMING MEMBERS DOUGLAS FIR-LARCH AT 16" O.C

#	VERTICAL:	
1.	2 LAYERS 5/8" BLOCKED DRYWALL WITH 6d COOLER NAILS AT 9" O.C AT EDGES & FIELD AT BASE LAYER, 8d COOLER NAILS AT 7" O.C AT EDGES AND FIELD AT FACE LAYER	........125 PLF
2.	1/2" DRYWALL WITH 5d COOLER NAILS AT 7" O.C AT EDGES AND FIELD (TABLE 25-I UBC)	..........50 PLF
3.	5/8" DRYWALL WITH 6d COOLER NAILS AT 7" O.C AT EDGES AND FIELD (TABLE 25-I UBC)	..........58 PLF
4.	1/2" DRYWALL WITH 5d COOLER NAILS AT 4" O.C AT EDGES AND FIELD (TABLE 25-I UBC)	..........63 PLF
5.	5/8" DRYWALL WITH 6d COOLER NAILS AT 4" O.C AT EDGES AND FIELD (TABLE 25-I UBC)	..........73 PLF
6.	1/2" BLOCKED DRYWALL WITH 5d COOLER NAILS AT 4" O.C AT EDGES AND FIELD. (TABLE 25-I UBC)	..........75 PLF
7.	5/8" BLOCKED DRYWALL WITH 6d COOLER NAILS AT 4" O.C AT EDGES AND FIELD. (TABLE 25-I UBC)	..........88 PLF
8.	7/8" STUCCO OVER APPROVED LATH WITH 16 GAUGE STAPLES AT 6" O.C. AT TOP AND BOTTOM PLATES, EDGES OF SHEAR WALL, AND FIELD (TABLE 25-I UBC)	........180 PLF
9.	7/8" STUCCO OVER APPROVED LATH WITH 16 GAUGE STAPLES AT 3" O.C AT TOP AND BOTTOM PLATES, EDGES AND 6" O.C AT FIELD. ICBO REPORT NO.1254 (OR EQUAL)	........260 PLF
10.	3/8" WOOD STRUCTURAL PANEL WITH 8d COMMON NAILS AT 6" O.C AT EDGES AND 12" O.C AT FIELD (TABLE 23-II-I-1 UBC)	........260 PLF
11.	3/8" WOOD STRUCTURAL PANEL WITH 8d COMMON NAILS AT 4" O.C AT EDGES AND 12" O.C AT FIELD (TABLE 23-II-I-1 UBC)	........350 PLF
12.	3/8" WOOD STRUCTURAL PANEL WITH 8d COMMON NAILS AT 3" O.C AT EDGES AND 12" O.C AT FIELD (TABLE 23-II-I-1 UBC)	........490 PLF
13.	3/8" WOOD STRUCTURAL PANEL WITH 8d COMMON NAILS AT 2" O.C AT EDGES AND 12" O.C AT FIELD (TABLE 23-II-I-1 UBC)	........640 PLF
14.	1/2"(OR 15/32) WOOD STRUCTURAL PANEL WITH 10d COMMON NAILS AT 2" O.C AT EDGES AND 12" O.C AT FIELD (TABLE 23-II-I-1 UBC)	........770 PLF
15.	1/2"(OR 15/32) STRUCT. I WOOD PANEL WITH 10d COMMON NAILS AT 2" O.C AT EDGES AND 12" O.C AT FIELD (TABLE 23-II-I-1 UBC)	........870 PLF

NOTES:

A. WOOD STRUCTURAL PANEL: MATERIAL APPROVED BY APA, PFS/TECO OR PITTSBURG TESTING LABORATORIES (THIS INCLUDES OSB) THESE VALUES ARE FOR DOUG-FIR LARCH OR SOUTHERN PINE, OTHER LUMBER SPECIES MAY DIFFER IN SHEAR CAPACITIES.
B. PROVIDE 2X BLOCKING AT HORIZONTAL WOOD STRUCTURAL PANEL PANEL JOINTS.
C. WHERE WOOD STRUCTURAL PANEL IS APPLIED ON BOTH FACES OF WALL AND NAIL SPACING IS LESS THAN 6" O.C, PANEL JOINTS SHALL BE OFFSET TO FALL ON DIFFERENT FRAMING MEMBERS OR FRAMING SHALL BE 3X OR WIDER AND NAILS STAGGERED ON EACH SIDE.
D. FOR SHEAR WALLS 12 TO 15 USE THE FOLLOWING:
   1) USE 3x MUDSILL
   2) USE 3x MEMBER @ PANEL JOINTS & HORIZONTAL BLOCKING
   3) EDGE NAILING SHALL BE STAGGERED
E. 10d SHORT BOX NAILS MAY BE USED IN LIEU OF 8d OR 10d COMMON NAILS @ SHEAR WALLS ONLY.
F. 2" x 2" x 3/16" STEEL PLATE WASHERS ARE REQUIRED ON EACH ANCHOR BOLT (UBC SECT. 1806.6.1)

HORIZONTAL:

ALL ROOF AND FLOOR SHEATHING TO BE EXPOSURE I OR EXTERIOR (TABLE 23-II-E-1 AND 23-II-H UBC)

ROOF: JOIST SPACING EQUAL TO OR LESS THAN 24" O.C: 15/32" WOOD STRUCTURAL PANEL PII 24/0, WITH 8d's AT 6" O.C AT EDGES AND BOUNDARIES, 12" O.C FIELD.

FLOOR: * JOIST SPACING EQUAL TO OR LESS THAN 16" O.C: 19/32" WOOD STRUCTURAL PANEL T&G SHTG, PII 32/16, w/10d's AT 6" O.C AT EDGES AND BOUNDARIES, 10" O.C FIELD.

JOIST SPACING EQUAL TO OR LESS THAN 20" O.C: 19/32" WOOD STRUCTURAL PANEL T&G SHTG, PII 40/20, w/10d's AT 6" O.C AT EDGES AND BOUNDARIES, 10" O.C FIELD.

JOIST SPACING EQUAL TO OR LESS THAN 24" O.C: 23/32" WOOD STRUCTURAL PANEL T&G SHTG, PII 48/24, w/10d's AT 6" O.C AT EDGES AND BOUNDARIES, 10" O.C FIELD.

* PANEL EDGES SHALL HAVE APPROVED T&G JOINTS OR SHALL BE SUPPORTED WITH BLOCKING NOT REQUIRED WHEN LIGHTWEIGHT CONCRETE IS PLACED OVER SUBFLOOR.

REVISIONS | BY

ESI/FME, INC.
STRUCTURAL ENGINEERS
1800 E. 16TH STREET
SANTA ANA, CA 92701
PHONE: 714-835-2800
FAX: 714-835-2819
JN-2459 11/30/00

THE ARTISAN COLLECTION
CATHEDRAL CITY, CALIFORNIA
FORD-DA VALL GROUP, LLC

DRAWN
CHECKED
DATE DEC. 8, 2000
JOB NO. 2459
SHEET
SGN
SHEET: OF:

FEB 28 2001

AutoCAD File: J:\files\2459\2459Sgn.dwg Plotted at: Mon Feb 26 12:58:26 2001

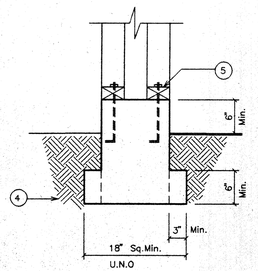

ESI/FME FDN-017

17 WING WALL FOOTING

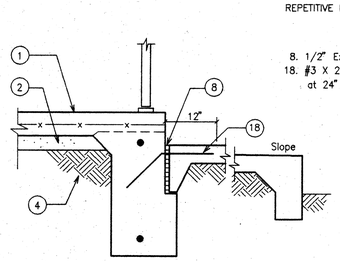

ESI/FME FDN-013

13 RAISED ENTRY PORCH

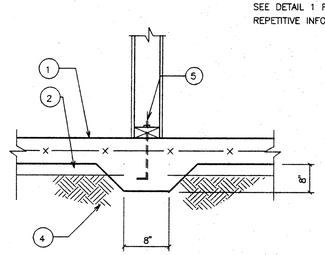

ESI/FME FDN-009

9 SCOOP FOOTING

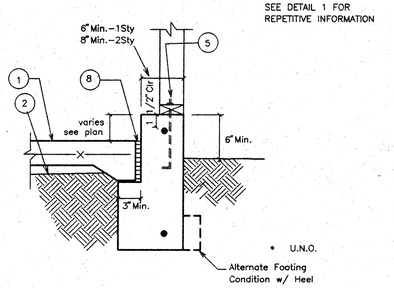

ESI/FME FDN-005

5 EXTERIOR GARAGE FOOTING

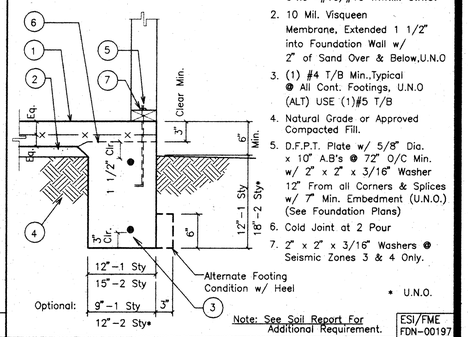

ESI/FME FDN-00197

1 TYPICAL EXTERIOR FOOTING

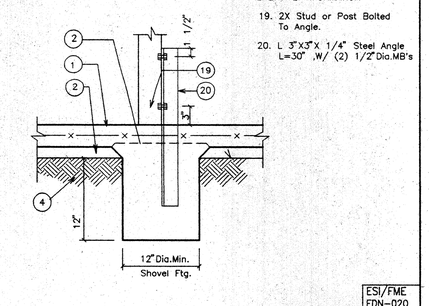

ESI/FME FDN-018

18 POT SHELF OR BOX-OUT

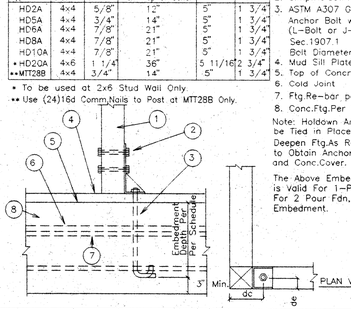

ESI/FME FDN-014

14 RAISED FLOOR

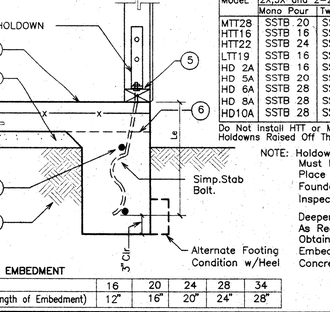

ESI/FME FDN-010

10 BUMPER GUARD

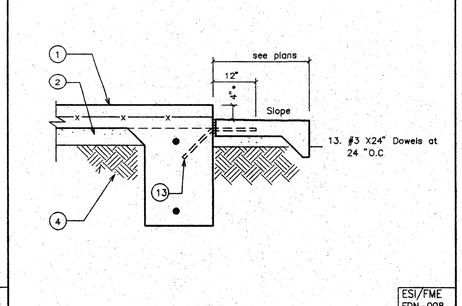

ESI/FME FDN-006

6 PORCH

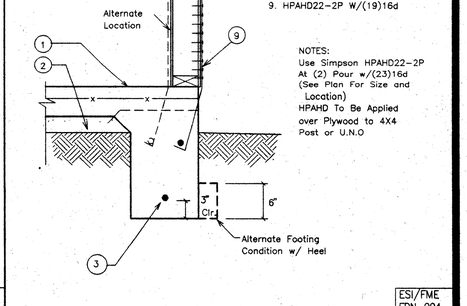

ESI/FME FDN-002

2 TYPICAL INTERIOR FOOTING

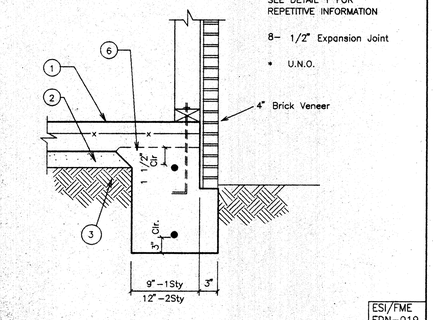

ESI/FME FDN-019

19 TYP. EXT. FOOTING w/ VENEER

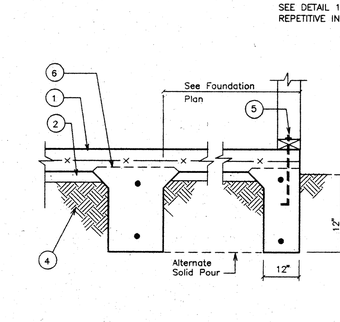

ESI/FME FDN-015

15 FIREPLACE FOOTING

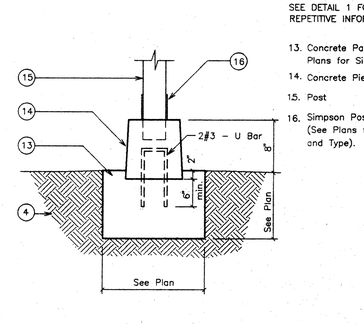

ESI/FME FDN-011

11 CONCRETE PIER

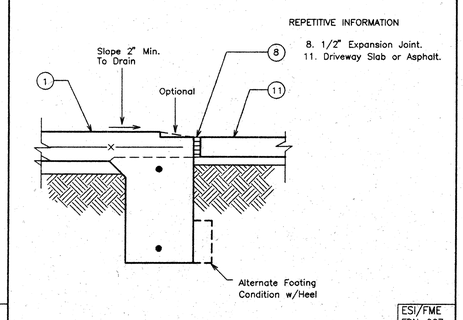

ESI/FME FDN-007

7 SLAB EDGE AT GARAGE

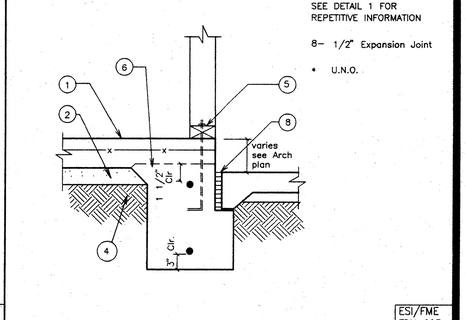

ESI/FME FDN-003

3 HOUSE TO GARAGE FOOTING

ESI/FME FDN-020

20 WALL BRACE

Simpson Type	Min.Post Size	A.B Dia.	Min.Embedment From Top of Conc	dc	de
HD2A	4x4	5/8"	12"	5"	1 3/4"
HD5A	4x4	3/4"	14"	5"	1 3/4"
HD6A	4x4	7/8"	21"	5"	1 3/4"
HD8A	4x4	7/8"	21"	5"	1 3/4"
HD10A	4x4	7/8"	21"	5"	1 3/4"
• HD2QA	4x6	1 1/4	36"	5 11/16"	2 3/4"
•• MIT28B	4x4	3/4"	14"	5"	1 3/4"

• To be used at 2x6 Stud Wall Only.
•• Use (24)16d Comm.Nails to Post at MIT28B Only.

1. Post Per Plan
2. Simp.Holdown per Plan
3. ASTM A307 Grade Steel Anchor Bolt with Std.Hook (L-Bolt or J-Bolt) Per UBC Sec.1907.1 Bolt Diameter per Schedule.
4. Mud Sill Plate
5. Top of Concrete
6. Cold Joint
7. Ftg.Re-bar per Plan
8. Conc.Ftg.Per Plan

Note: Holdown Anchors Must be Tied in Place Prior to Deepen Ftg.As Required to Obtain Anchor Embedment and Conc.Cover.

The Above Embedment For A.B is Valid For 1-Pour Fdn. For 2 Pour Fdn, add 6" to the Embedment.

ESI/FME FDN-016

16 SIMPSON HOLDOWN

SSTB Selection Table:

Model	2X,3X and 2-2X Sill.Pl.	
	Mono Pour	Two Pour
MIT28	SSTB 20	SSTB 24
HTT16	SSTB 16	SSTB 20
HTT22	SSTB 24	SSTB 24
LTT19	SSTB 16	SSTB 20
HD 2A	SSTB 16	SSTB 20
HD 5A	SSTB 20	SSTB 24
HD 6A	SSTB 28	SSTB 34
HD 8A	SSTB 28	SSTB 34
HD10A	SSTB 28	SSTB 34

Do Not Install HTT or MIT or LTT Holdowns Raised Off The Mudsill

NOTE: Holdown Anchors Must Be Tied In Place Prior To Foundation Inspection.

Deepen Footing As Required To Obtain Anchor Embedment and Concrete Cover.

SSTB EMBEDMENT

SSTB	16	20	24	28	34
Le (Length of Embedment)	12"	16"	20"	24"	28"

ESI/FME FDN-012

12 SIMPSON HOLDOWN w/ SSTB BOLT

ESI/FME FDN-008

8 STEP

ESI/FME FDN-004

4 SIMPSON HPAHD22

REVISIONS	BY

ESI/FME, INC.
STRUCTURAL ENGINEERS
1800 E. 16TH STREET
SANTA ANA, CA 92701
PHONE: 714-835-2800
FAX: 714-835-2819
JN.-2459 11/30/00

THE ARTISAN COLLECTION
CATHEDRAL CITY, CALIFORNIA
FORD-DA VALL GROUP, LLC

DRAWN	
CHECKED	
DATE	DEC. 8, 2000
JOB NO.	2459
SHEET	SD1
SHEET:	OF:

AutoCAD File: J:\Files\2459\2459SD1.dwg Plotted at: Mon Feb 26 13:00:01:2001

FEB 28 2001

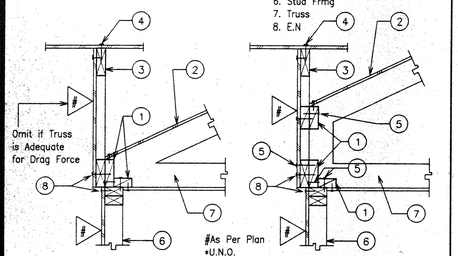

ESI/FME SHR-009

17 SHEAR TRANSFER

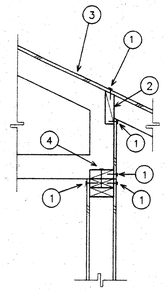

ESI/FME SHR-007

13 SHEAR TRANSFER

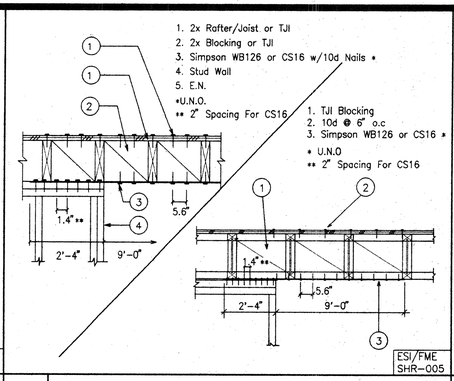

ESI/FME SHR-005

9 PERPENDICULAR DRAG STRUT

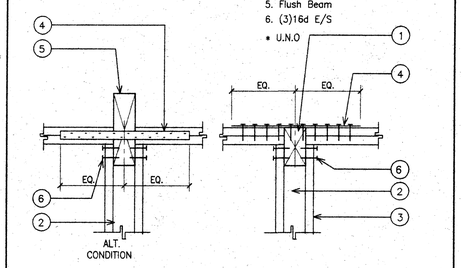

ESI/FME DRG-003

5 BEAM POCKET DRAG CONNECTION

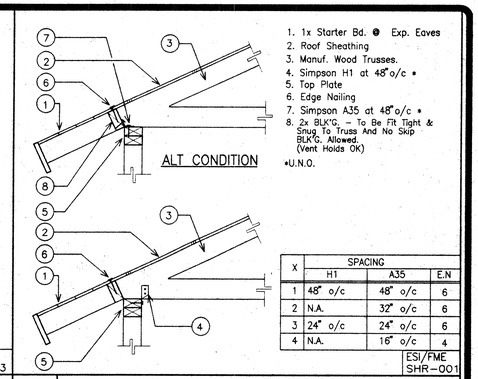

X	SPACING H1	A35	E.N
1	48" o/c	48" o/c	6
2	N.A.	32" o/c	6
3	24" o/c	24" o/c	6
4	N.A.	16" o/c	4

ESI/FME SHR-001

1 EAVE TRUSS SHEAR CONNECTION

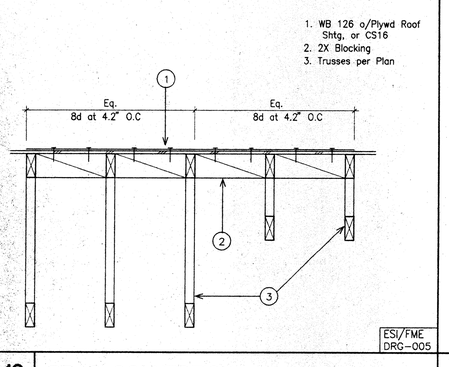

ESI/FME DRG-005

19 DRAG CONNECTION

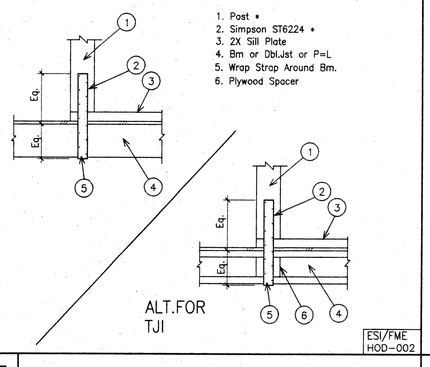

ESI/FME HOD-002

15 TIE DOWN CONNECTION

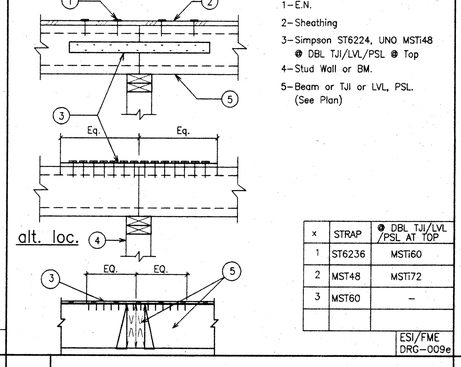

x	STRAP	@ DBL TJI/LVL /PSL AT TOP
1	ST6236	MSTI60
2	MST48	MSTI72
3	MST60	–

ESI/FME DRG-009e

11 JOIST DRAG STRUT

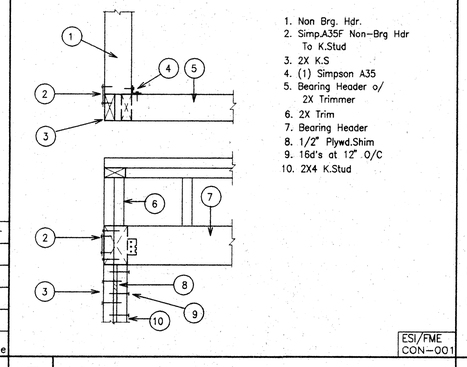

ESI/FME CON-001

7 HEADER CORNER CONNECTION

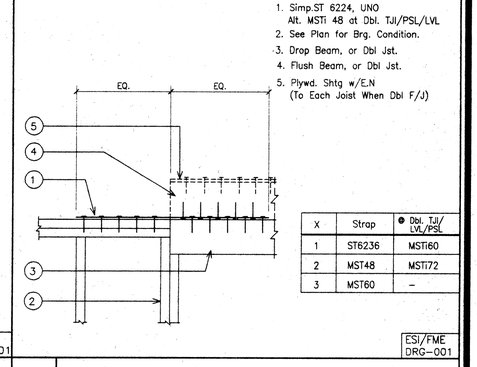

X	Strap	@ Dbl. TJI/ LVL/PSL
1	ST6236	MSTI60
2	MST48	MSTI72
3	MST60	–

ESI/FME DRG-001

3 DRAG DETAIL

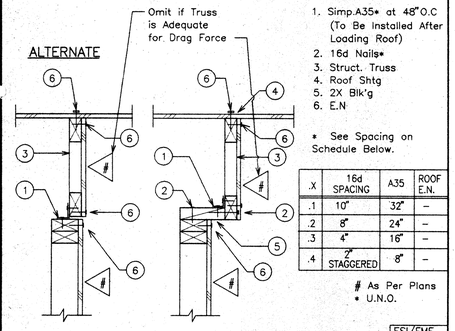

X	16d SPACING	A35	ROOF E.N.
.1	10"	32"	–
.2	8"	24"	–
.3	4"	16"	–
.4	2" STAGGERED	8"	–

ESI/FME SHR-010

18 DRAG TRUSS SHEAR TRANSFER

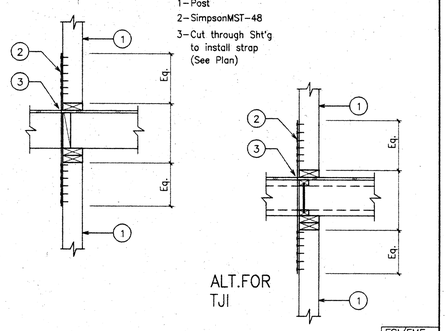

ESI/FME HOD-001

14 POST TO POST HOLDOWN

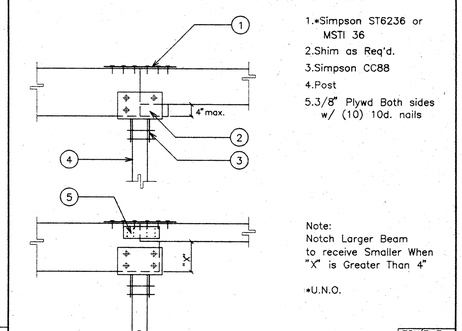

ESI/FME CON-002

10 MAIN INTERIOR BEAM

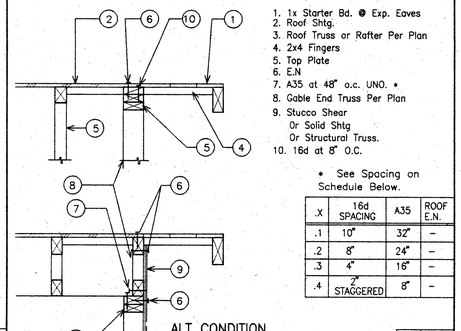

X	16d SPACING	A35	ROOF E.N.
.1	10"	32"	–
.2	8"	24"	–
.3	4"	16"	–
.4	2" STAGGERED	8"	–

ESI/FME SHR-003

6 GABLE

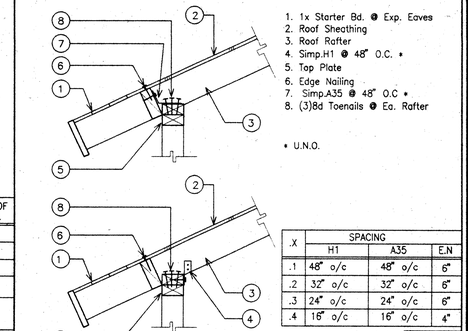

X	SPACING H1	A35	E.N
.1	48" o/c	48" o/c	6"
.2	32" o/c	32" o/c	6"
.3	24" o/c	24" o/c	6"
.4	16" o/c	16" o/c	4"

ESI/FME SHR-002

2 EAVE RAFTER SHEAR CONNECTION

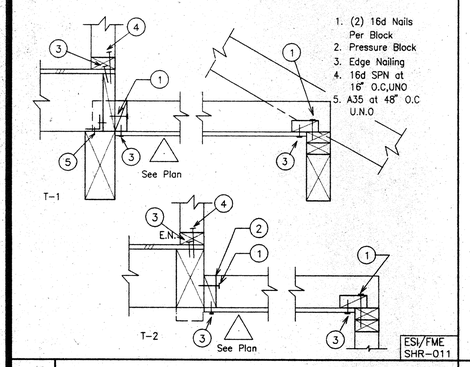

ESI/FME SHR-011

20 SHEAR TRANSFER

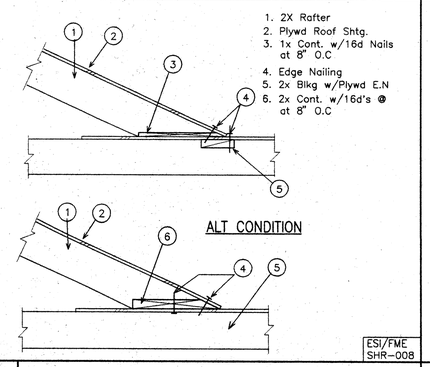

ESI/FME SHR-008

16 SHEAR TRANSFER

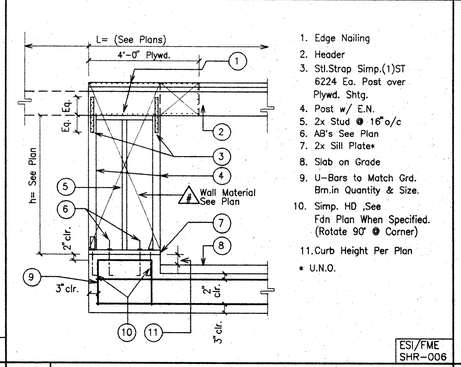

ESI/FME SHR-006

12 GARAGE DOOR HDR SHR WALL

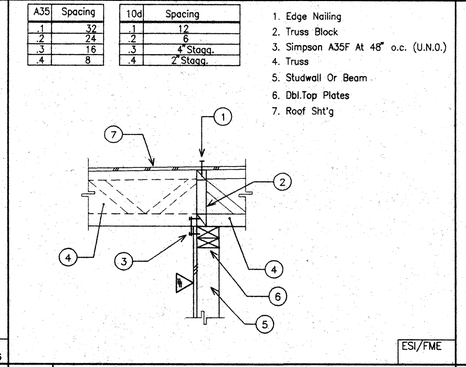

A35	Spacing
.1	32
.2	24
.3	16
.4	8

10d	Spacing
.1	12
.2	8
.3	4" Stagg.
.4	2" Stagg.

ESI/FME

8 TRUSS SHEAR CONNECTION

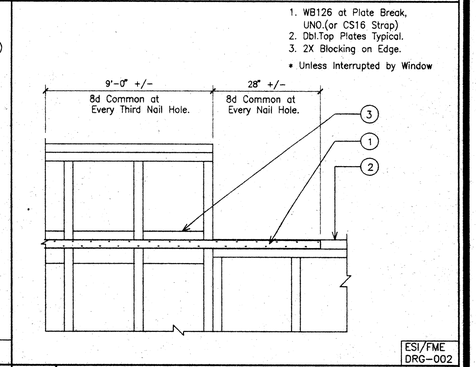

ESI/FME DRG-002

4 DRAG CONNECTION

REVISIONS	BY

ESI/FME, INC.
STRUCTURAL ENGINEERS
1800 E. 16TH STREET
SANTA ANA, CA 92701
PHONE: 714-835-2800
FAX: 714-835-2819
JN.-2459 11/30/00

THE ARTISAN COLLECTION
CATHEDRAL CITY, CALIFORNIA
FORD-DA VALL GROUP, LLC

DRAWN
CHECKED
DATE DEC. 8, 2000
JOB NO. 2459
SHEET SD2
SHEET: OF:

AutoCAD File J:\Files\2459\2459SD2.dwg Plotted at Mon Feb 26 12:56:51 2001

FEB 28 200

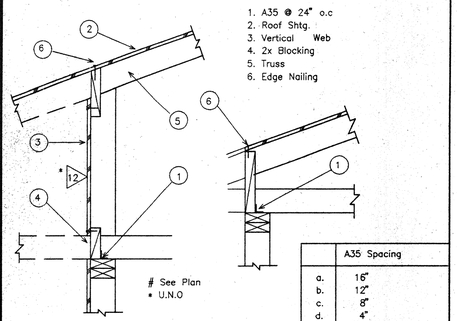

ESI/FME SHR-019

37 TRUSS SHEAR BLOCK

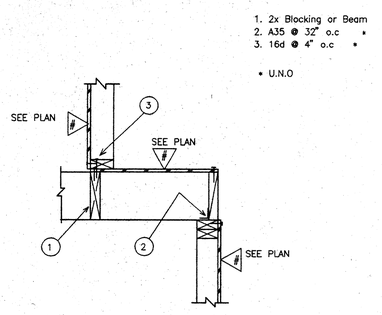

ESI/FME SHR-017

33 SHEAR AT POT SHELF

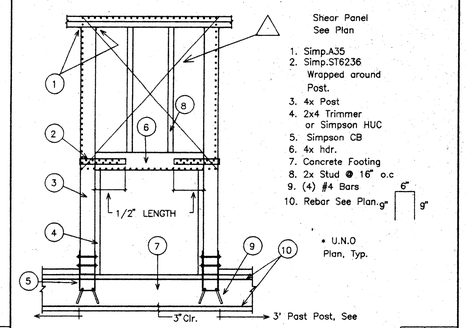

ESI/FME STL-061

29 TYPICAL FIREPLACE SHEARWALL

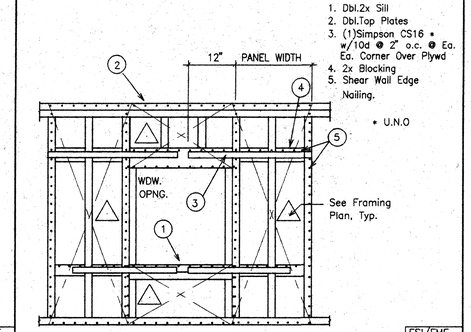

ESI/FME SHR-015

25 SPECIAL SHEAR AT WINDOW OPENING

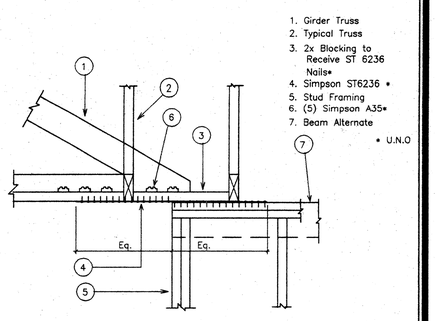

ESI/FME DRG-006

21 DRAG TO GIRDER TRUSS

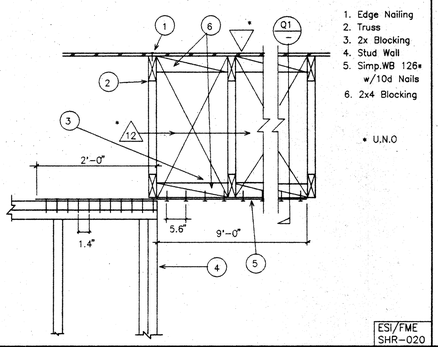

ESI/FME SHR-020

38 PERPENDICULAR TRUSS SHEAR BLOCK

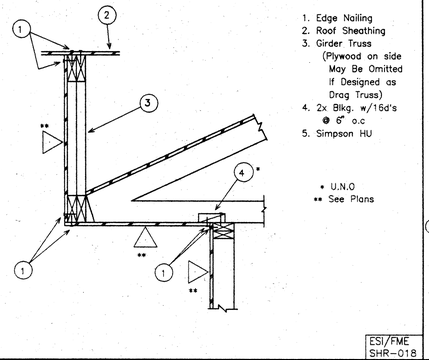

ESI/FME SHR-018

34 SHEAR TRANSFER

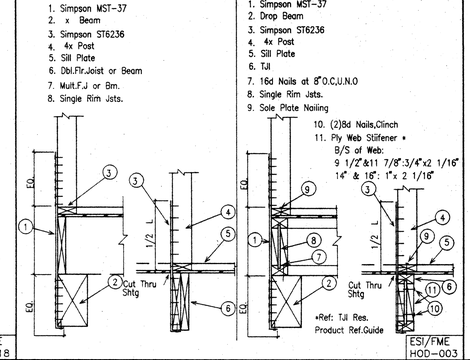

ESI/FME HOD-003

30 FLOOR HOLDOWN

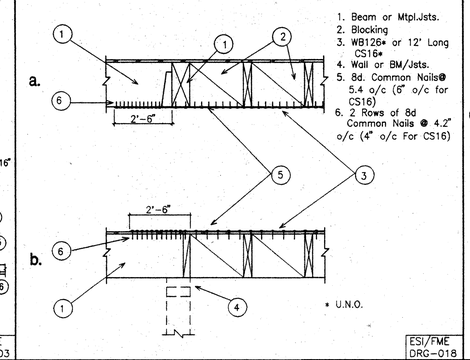

ESI/FME DRG-018

26 INTERRUPTED DRAGS

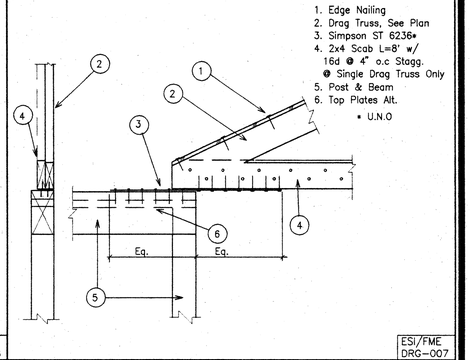

ESI/FME DRG-007

22 DRAG TO TRUSS

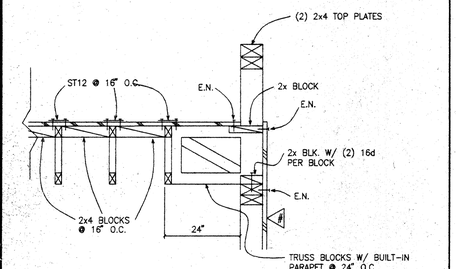

ESI/FME

39 TRUSS PARALLEL TO WALL

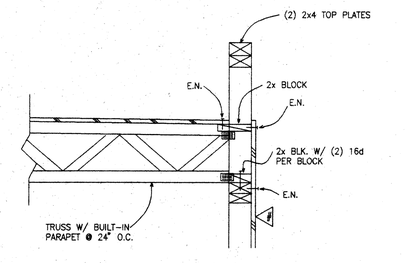

ESI/FME

35 TRUSS PERPENDICULAR TO WALLL

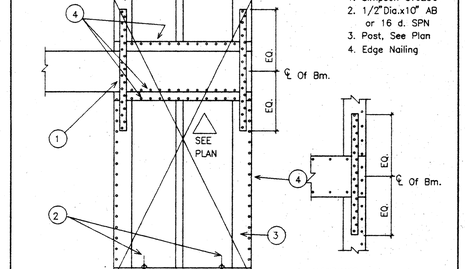

ESI/FME SHR-016

31 TRANSOM HEADER SHEAR

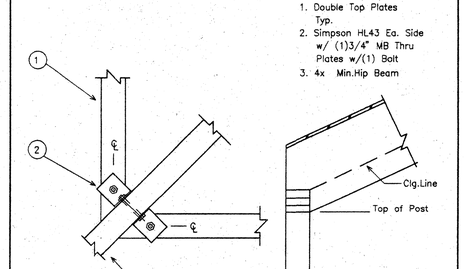

ESI/FME CON-003

27 CORNER HIP CONNECTION

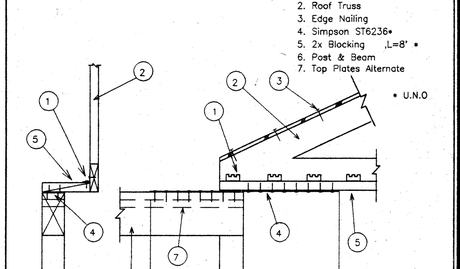

ESI/FME DRG-008

23 OFFSET DRAG TIE

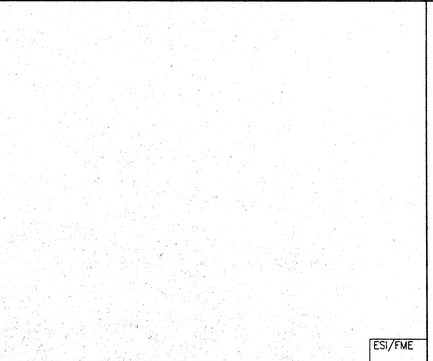

ESI/FME ROF-036

32 TRUSS TO ROOF JOISTS

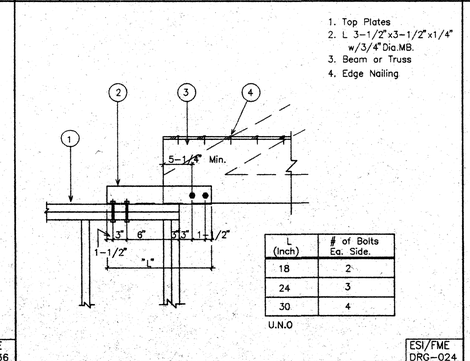

ESI/FME DRG-024

28 BOLTED DRAG STRUT

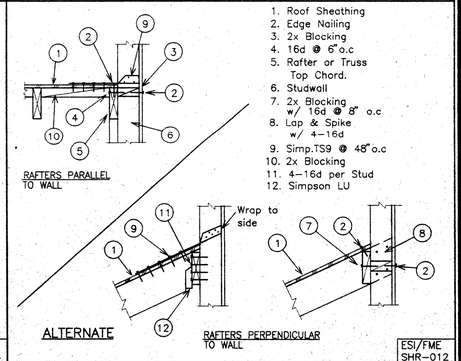

ESI/FME SHR-012

24 ROOF TO WALL SHEAR TRANSFER

40

36

REVISIONS | BY

ESI/FME, INC.
STRUCTURAL ENGINEERS
1800 E. 16TH STREET
SANTA ANA, CA 92701
PHONE: 714-835-2800
FAX: 714-835-2619

JN.-2459 11/30/00

THE ARTISAN COLLECTION
CATHEDRAL CITY, CALIFORNIA
FORD-DA VALL GROUP, LLC

DRAWN
CHECKED
DATE DEC. 8, 2000
JOB NO. 2459
SHEET
SD3
SHEET: OF:

AutoCAD File: J:\Jobs\2459\2459SD3.dwg Plotted at: Wed Feb 28 14:06:41 2001

FEB 28 200